F.A.P. RTE.	SECTION	COUNTY	TOTAL SHEETS	SHEET NO.
335	119R-2	LAKE	439	296
STA. 432+83.12		TO STA. 470+56.84		
FED. ROAD DIST. NO.	ILLINOIS	FED. AID PROJECT		

60B01

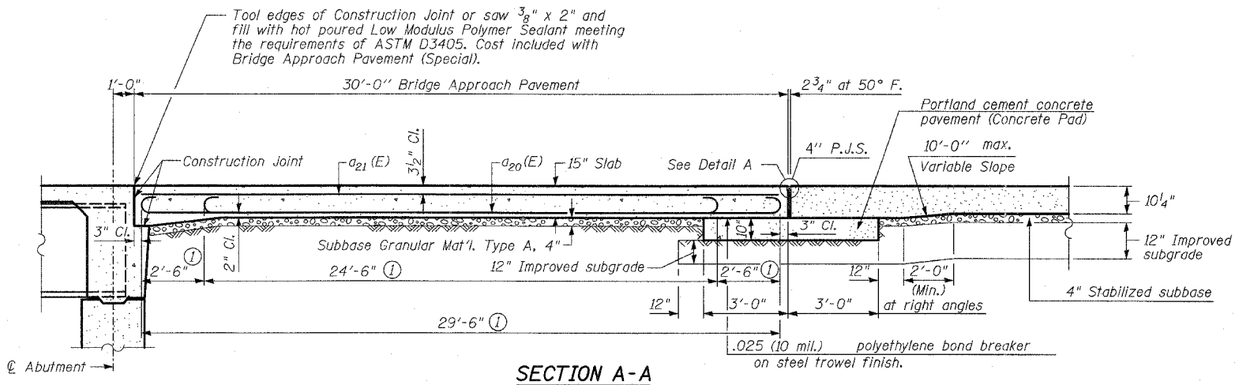

SECTION A-A

(1) Stagger a_{20}(E) bars as shown on plan - full width

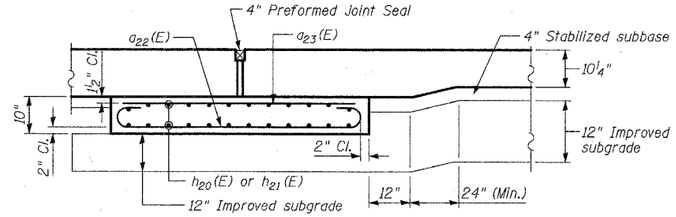

SECTION B-B - RIGID PAVEMENT

(Showing reinforcement)

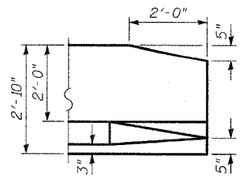

DETAIL B

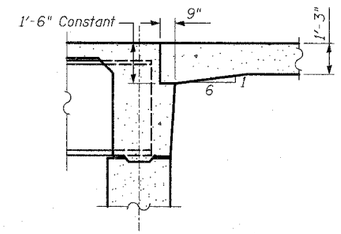

SECTION AT INTEGRAL ABUTMENT

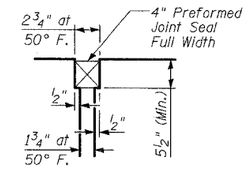

DETAIL A

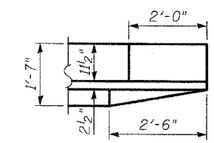

PLAN

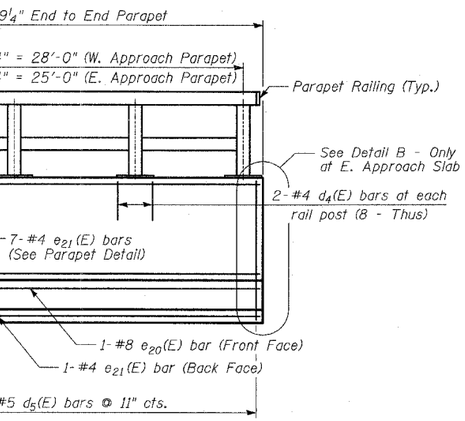

INSIDE ELEVATION OF TYPE F PARAPET

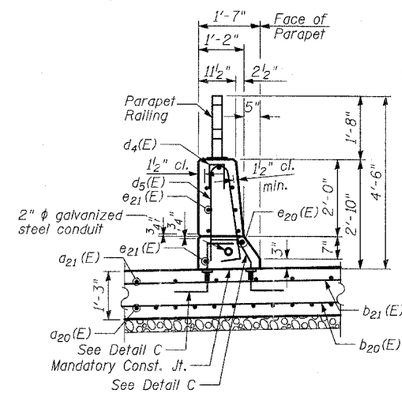

TYPE F PARAPET DETAIL

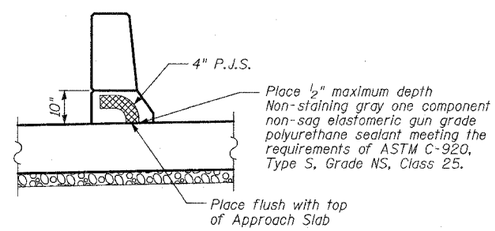

SECTION D-D

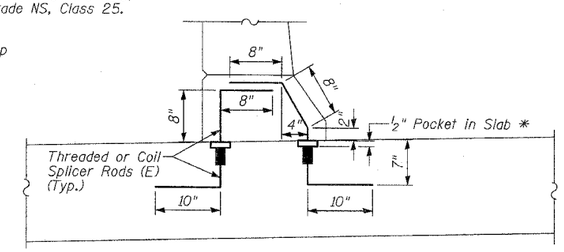

DETAIL C

*During Stage II Construction attach 5/8" ϕ galvanized hex bolts to couplers. Cost of bolts included in Bar Splicers.

Located in F-Shape parapet (33 required each side both approaches = 132 total) See Sheet S-38 for Minimum Capacity and Pull Out Strength Required.

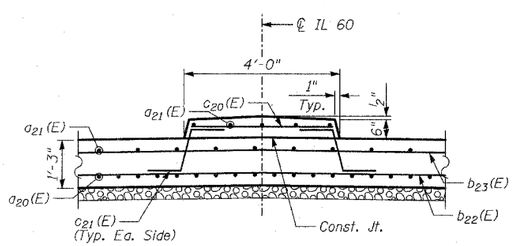

MEDIAN DETAIL

Median Notes:

Transition median from detail above to match Type SB-6.12 at end of Approach Pavement.

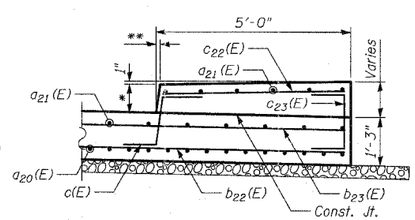

SIDEWALK DETAIL

Sidewalk Notes:

* Vary sidewalk thickness. Thickness is 9" from abutment to end of wingwall and varies from 9" at end of wingwall to 6" at end of approach pavement.

** Vary dimension. 1 1/4" from end of abutments to end wingwall. Varies 1 1/4" at end of wingwall to match B-6.12 Curb and Gutter at end of approach pavement.

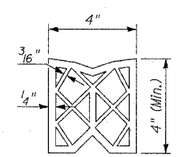

PREFORMED JOINT SEAL

SHEET S-49 OF S-53

REVISIONS	
NAME	DATE

ILLINOIS DEPARTMENT OF TRANSPORTATION

APPROACH PAVEMENT DETAILS - I

ILLINOIS 60 OVER I-94

F.A.P. RTE. 335 SECTION 119R-2

LAKE COUNTY STA. 445+54.14

S.N. 049-2012 ISTHA BRIDGE NO. 407

SCALE:

DATE: MAY 8, 2007

DESIGNED BY: PL

DRAWN BY: SNB

CHECKED BY: SP

TY·LIN INTERNATIONAL

05/03/2007 04:31:30 PM

p:\60245611-60\structur\final\L60BRapprdtL06N