CONTRACT NO. 60B01

F.A. RTE.	SECTION	COUNTY	TOTAL SHEETS	SHEET NO.
			439	324
STA.		TO STA.		
FED. ROAD DIST. NO.	ILLINOIS	FED. AID PROJECT		

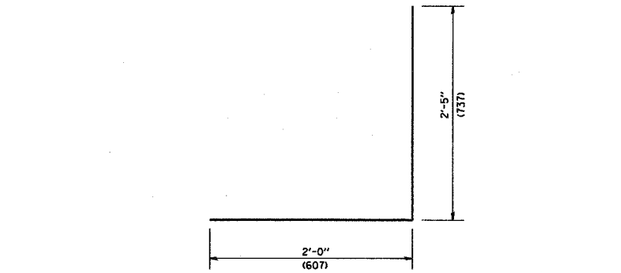

BAR d (E)

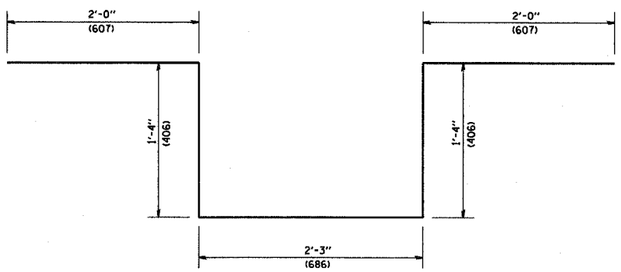

BAR d_1 (E)

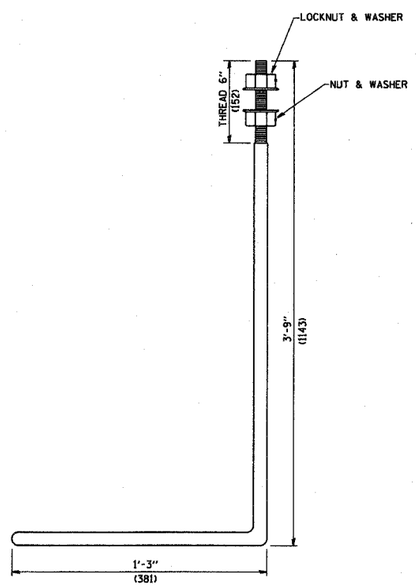

1" (25.4) dia. ANCHOR BOLT

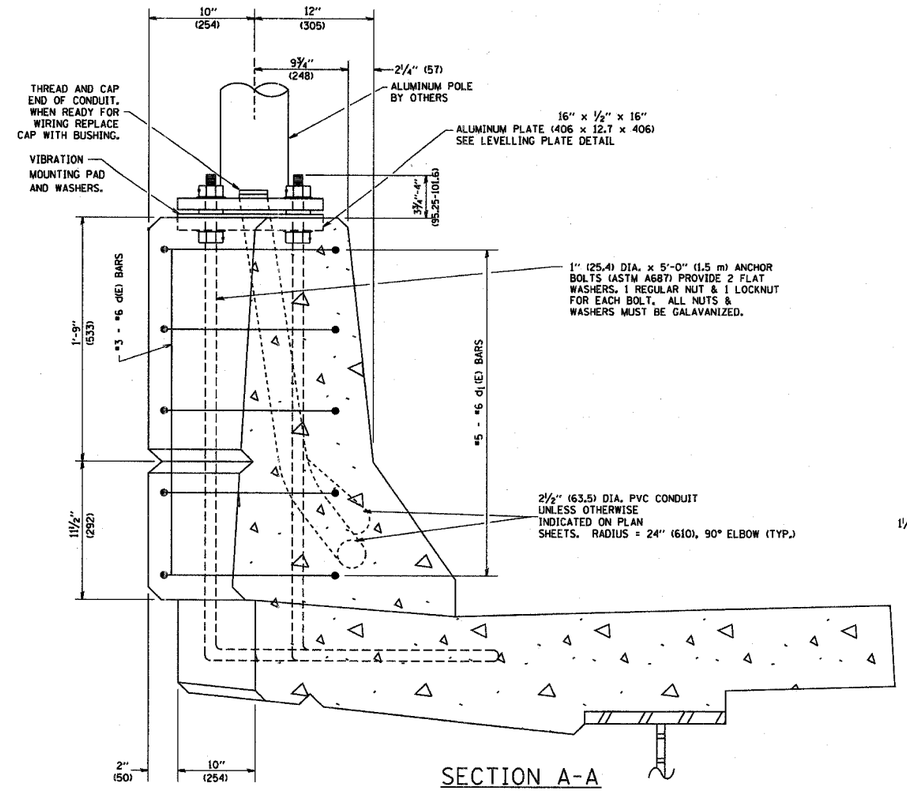

SECTION A-A

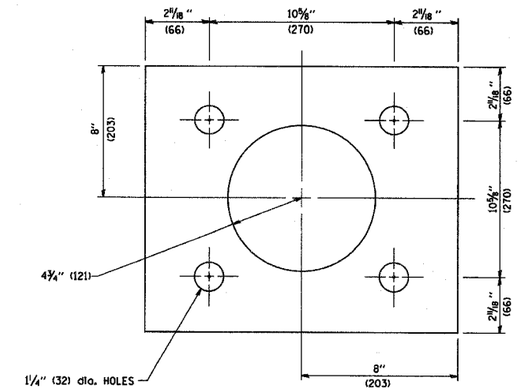

LEVELING PLATE DETAIL

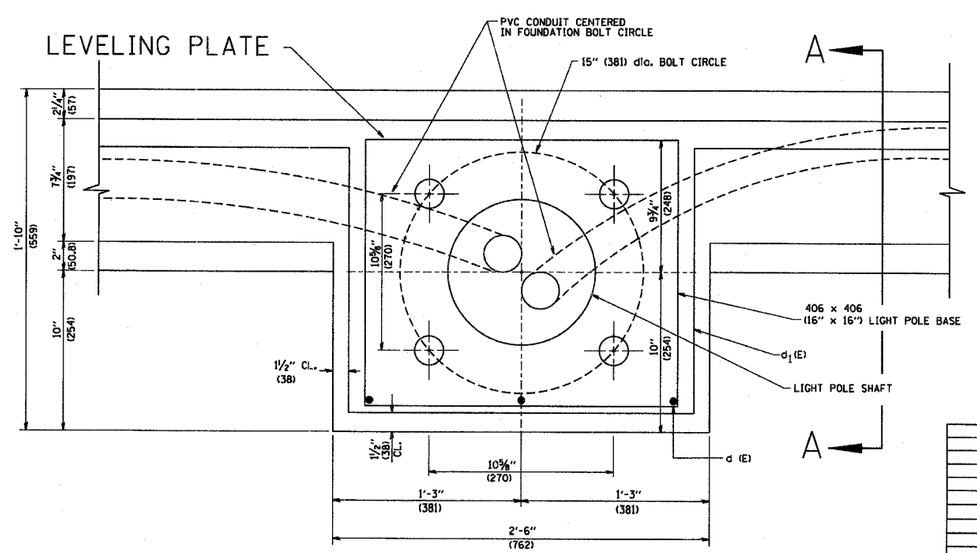

PLAN

NOTES

1. ALL DIMENSIONS ARE IN INCHES (MILLIMETERS) UNLESS OTHERWISE SHOWN.
2. LEVEL LIGHT POLE PLATES, USING THE FLANGE NUTS, PRIOR TO POURING THE PARAPET WALL. THE TOP OF THE PLATE SHALL BE AT THE SAME ELEVATION AS THE FINISHED CONCRETE PARAPET.
3. THE COST OF ANCHOR BOLTS, CONDUIT, LEVELLING PLATE AND FOUNDATION IS INCLUDED IN THE COST OF THE BRIDGE STRUCTURE.

BE-330

REVISIONS NAME	DATE

ILLINOIS DEPARTMENT OF TRANSPORTATION

LIGHT POLE MOUNTED ON CONCRETE PARAPET WALL 15" (381 mm) BOLT CIRCLE

SCALE: NONE

DATE: 1/10/2007

DRAWN BY

CHECKED BY

BE-330

REVISION DATE: 01/01/07

PLOT DATE = 1/18/2007
FILE NAME = c:\projects\district1\bx330.dgn
PLOT SCALE = 49.9999 ' / IN.
USER NAME = ulr-ckhld