CONTRACT NO. 60C03

F.A.U. RTE.	SECTION	COUNTY	TOTAL SHEETS	SHEET NO.
1374	CAGG WRS	COOK	43	26
STA.		TO STA.		
FED. ROAD DIST. NO.	ILLINOIS	FED. AID PROJECT		

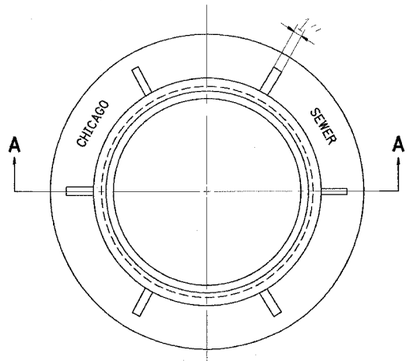

PLAN

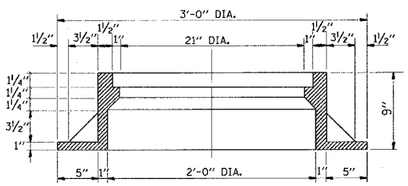

SECTION A-A

NOTE: METAL PLATES MUST BE FURNISHED FOR PERFORATED LIDS ON MANHOLES

CHICAGO STANDARD MANHOLE FRAME

SCALE: 1½"=1'-0"
MATERIAL: CAST IRON

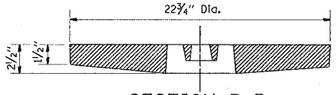

SECTION B-B

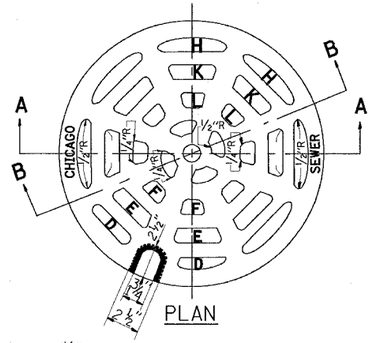

PLAN

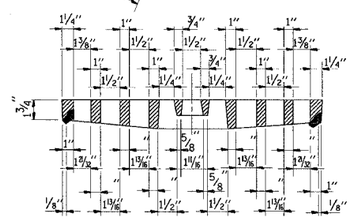

SECTION A-A

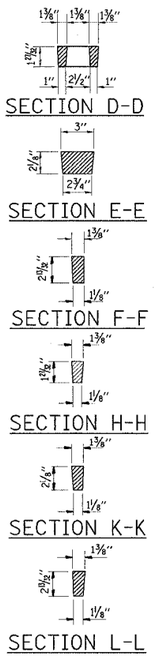

SECTION D-D
SECTION E-E
SECTION F-F
SECTION H-H
SECTION K-K
SECTION L-L

PERFORATED LID FOR CATCH BASINS & MANHOLES

SCALE: 2"=1'-0"
MATERIAL: CAST IRON

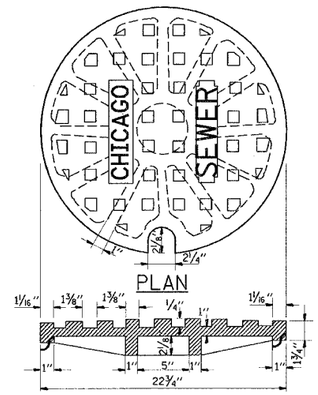

PLAN

SECTION

SOLID LID FOR MANHOLES

SCALE: NONE
MATERIAL: CAST IRON

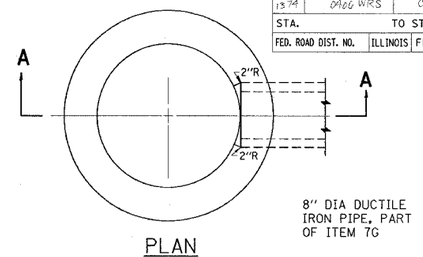

PLAN
(FRAME & LID NOT SHOWN)

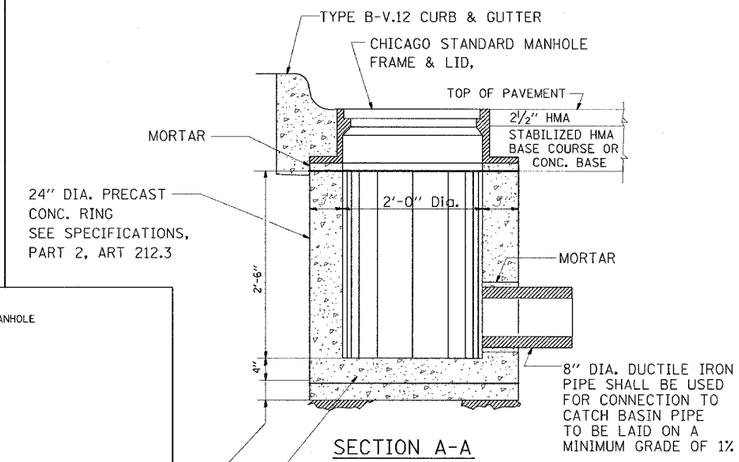

SECTION A-A

STANDARD INLETS

SCALE 1"= 1'-0"
ITEM 12

THIS INLET DETAIL IS SOMETIMES REFERRED TO AS "CHICAGO STANDARD INLET, TYPE A"

NOTE:
INLETS SHALL NOT BE CONSTRUCTED UNLESS IT IS IMPOSSIBLE TO CONSTRUCT A CATCH BASIN. THE CONTRACTOR SHALL HAVE THE DEPARTMENT OF SEWERS APPROVAL BEFORE CONSTRUCTING INLETS.

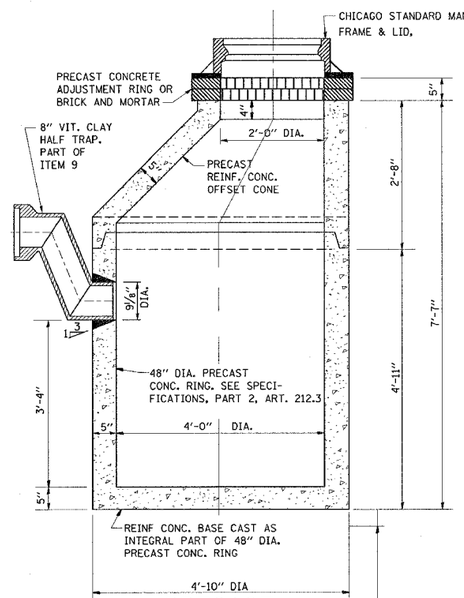

PRECAST

NOTE:
6" MINIMUM GRANULAR EMBEDMENT UNDER ALL CATCH BASINS

STANDARD CATCH BASINS

SCALE: ¾"= 1'-0"
ITEM 9

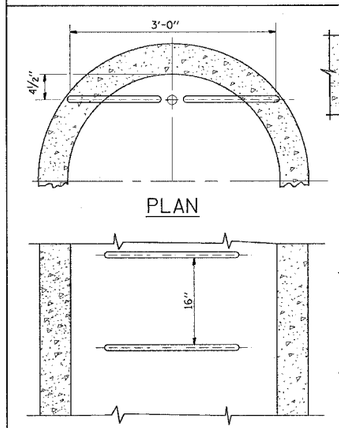

PLAN

ELEVATION
TYPE X
SCALE: 1"=1'-0"

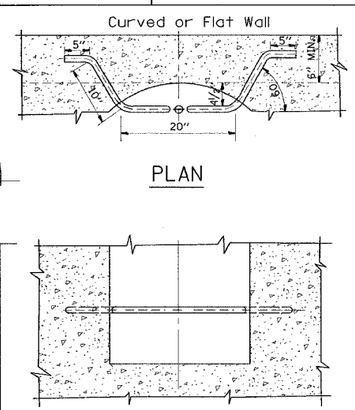

PLAN

ELEVATION
TYPE Y
SCALE: 1"=1'-0"

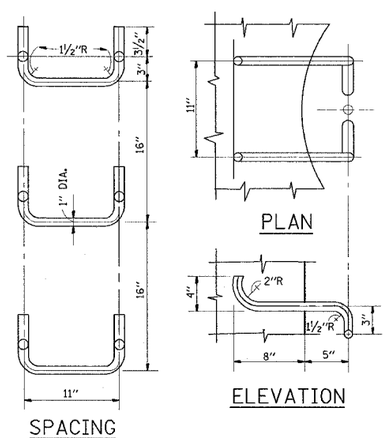

SPACING

PLAN

ELEVATION

HANDHOLD-TYPE Z RUNG

Scale: 1½"=1'-0"

STANDARD LADDER RUNGS

ALL LADDER RUNGS SHALL BE ALUMINUM OR GALVANIZED WROUGHT IRON AS SPECIFIED IN THE SPECIFICATIONS, PART 2, ARTICLE 214.2. RUNGS SHALL BE 1" DIAMETER OR OF A SHAPE HAVING AN EQUIVALENT CROSS-SECTIONAL AREA.

CITY OF CHICAGO
DEPARTMENT OF SEWERS
ENGINEERING DIVISION

REVISIONS	
NAME	DATE
M. GOMEZ	01/25/01

ILLINOIS DEPARTMENT OF TRANSPORTATION

CITY OF CHICAGO
CATCH BASIN, INLET AND MANHOLE DETAILS

SCALE: VERT. HORIZ. NONE

DRAWN BY
CHECKED BY

BD600-13 (BD47)

PLOT DATE = 3/15/2007
FILE NAME = W:\distsd\bd47.dgn
PLOT SCALE = 49.9999 ' / IN.
USER NAME = aborwash