CONTRACT NO. 68469

F.A.P. RTE.	SECTION	COUNTY	TOTAL SHEETS	SHEET NO.
317	(46-1)RS-7	PEORIA	62	8
STA.		TO STA.		
FED. ROAD DIST. NO.	ILLINOIS	FED. AID PROJECT		

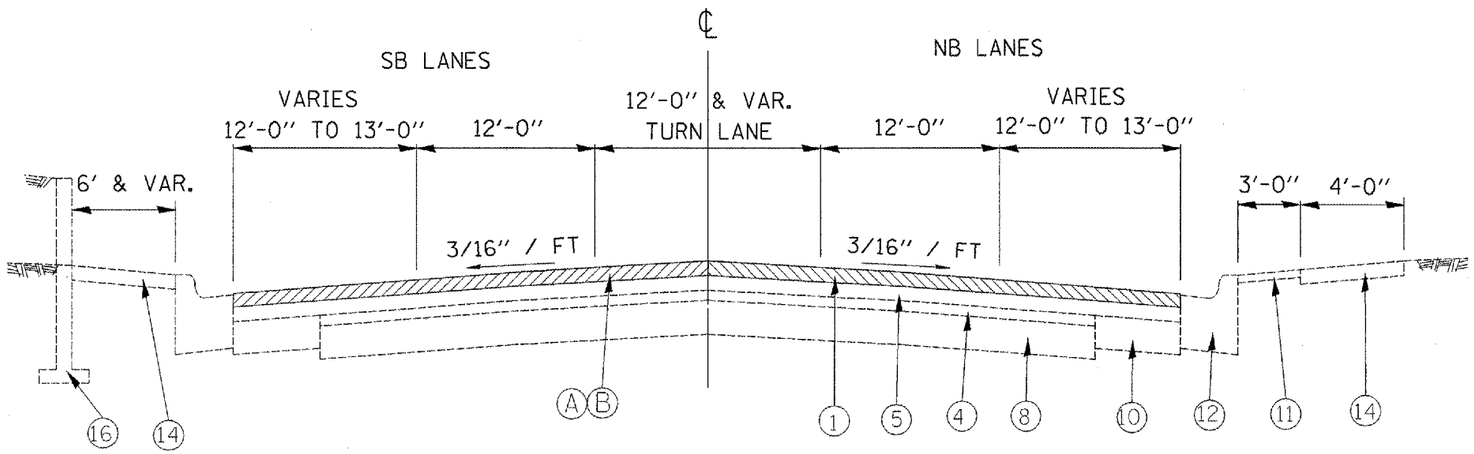

STA 63+40 TO STA 61+00

PROPOSED LEGEND

- (A) HOT MIX ASPHALT SURFACE REMOVAL, 1.75"
- (B) HMA SURFACE COURSE, MIX E, N70, 1.75"

EXISTING LEGEND

1. BIT CONC SURF CSE, 1.5"
2. BIT CONC BIND CSE, 3.5"
3. LEVELING BINDER (MM), TY 1, 1"
4. LEVELING BINDER (MM), TY 2, VAR. DEPTH
5. BIT OVERLAY 1.5" TO 1.75"
6. AREA REFLECTIVE CRACK CONTROL, SYSTEM A
7. PCC PAVEMENT 8"
8. PCC PAVEMENT 10"
9. PCC BASE COURSE 8"
10. PCC BASE COURSE 9"
11. INCIDENTAL BITUMINOUS SURFACE 2"
12. CCC&G TYPE B-6.12
13. CCC&G TYPE B-6.24
14. PCC SIDEWALK 4"
15. CONCRETE MEDIAN
16. RETAINING WALL, INTERMITTENT LOCATIONS

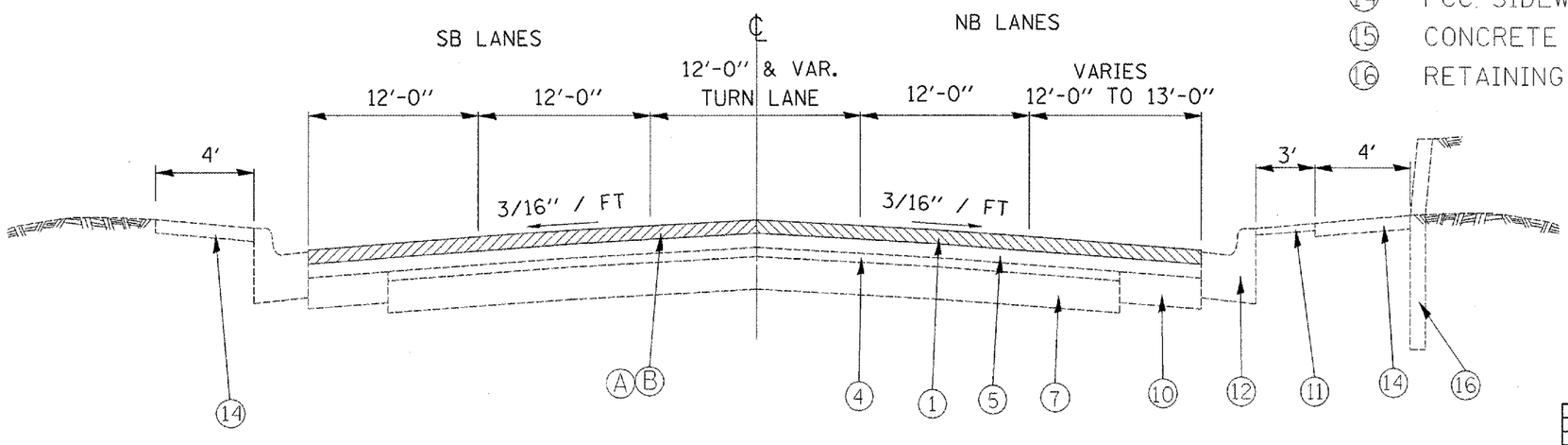

STA 61+00 TO STA 45+85

REVISIONS NAME	DATE

ILLINOIS DEPARTMENT OF TRANSPORTATION

TYPICAL SECTIONS

SCALE: VERT. HORIZ.
DATE

DRAWN BY
CHECKED BY

PLOT DATE = 4/26/2007
FILE NAME = c:\pwworking\cu24\bar\t\plansheets.dgn
PLOT SCALE = 48.0000 ' / IN.
USER NAME = ccrover.pj