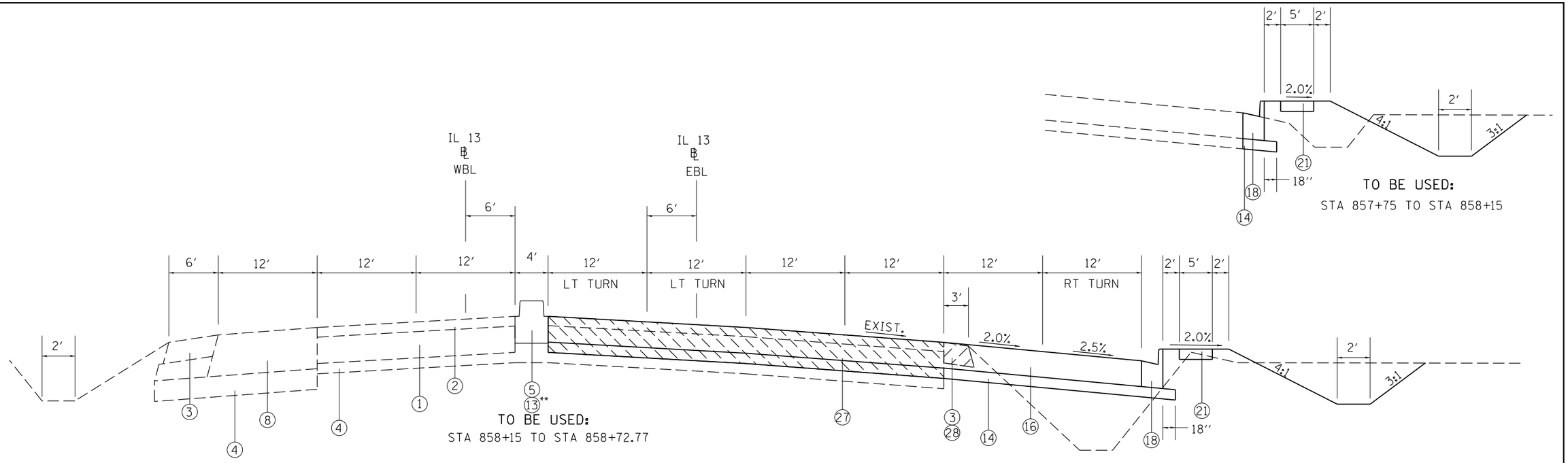

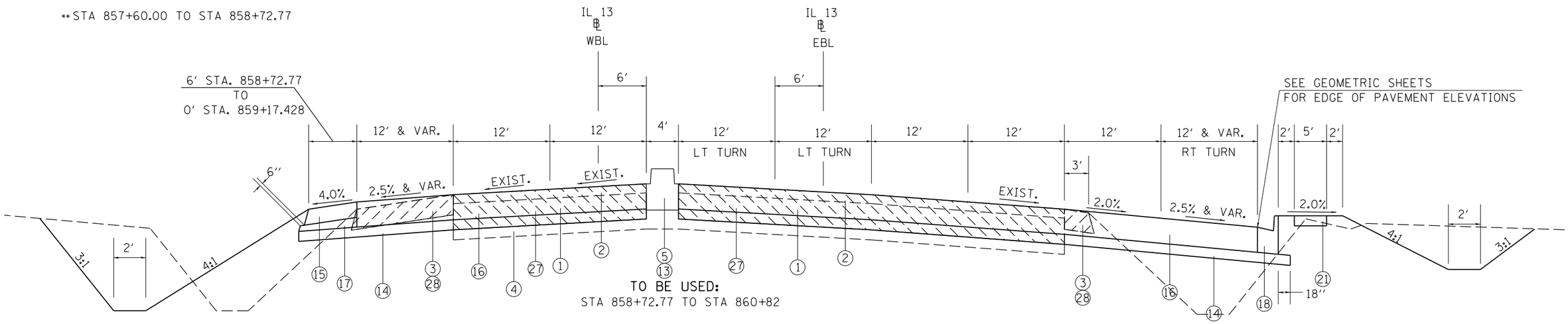

1 EXIST. PCC PAVEMENT 10″
2 EXIST. HMA RESURFACING 3 1/4″
3 EXIST. HMA SHOULDER 8″
4 EXIST. SUB-BASE GANULAR MATERIAL
5 EXIST. MEDIAN
6 EXIST. COMBINATION CURB & GUTTER
7 EXIST. SIDEWALK
8 EXIST. PAVEMENT
9 EXIST. MEDIAN SURFACE
10 PROP. HMA FULL DEPTH PAVEMENT 14 3/4″
11 PROP. HMA POLY SURFACE COURSE, MIX "E", N105, 1 1/2″
12 PROP. HMA POLY BINDER COURSE, IL-19.0, N105, 1 3/4″ & VARIABLE
13 CONCRETE MEDIAN, TYPE SB-6.06
14 PROP. SUB-BASE GRANULAR MATERIAL, TYPE A 8″
15 PROP. HMA SHOULDER 8″
16 PROP. PORTLAND CEMENT PAVEMENT 10″, JOINTED
17 PROP. SUB-BASE GRANULAR MATERIAL, TYPE C
18 PROP. COMBINATION CONCRETE CURB AND GUTTER, TYPE B-6.24
19 PROP. COMBINATION CONCRETE CURB AND GUTTER, TYPE B-6.06
20 PROP. CONCRETE MEDIAN SURFACE, 4″
21 PROP. PORTLAND CEMENT CONCRETE SIDEWALK, 5″
22 PROP. HMA SURFACE REMOVAL 3 1/4″
23 PROP. MEDIAN REMOVAL
24 PROP. CC&G REMOVAL
25 PROP. AGGREGATE FILL (INCIDENTAL)
26 PROP. SIDEWALK REMOVAL
27 PROP. PAVEMENT REMOVAL
28 PROP. PAVED SHOULDER REMOVAL
29 PROP. COMBINATION CONCRETE CURB AND GUTTER, SPECIAL
30 PROP. SEGMENTAL BLOCK RETAINING WALL
31 PROP. CONCRETE GUTTER, TYPE A

FILE NAME = c:\pw_work\pwidot\kelleykd\d018445l\78203-sht-typ.dgn	USER NAME = $USER$	DESIGNED -	REVISED -
		DRAWN -	REVISED -
	PLOT SCALE = 100.0000 ′ / in.	CHECKED -	REVISED -
	PLOT DATE = 5/11/2012	DATE -	REVISED -

STATE OF ILLINOIS
DEPARTMENT OF TRANSPORTATION

TYPICALS
IL 13

SCALE: | SHEET NO. OF SHEETS | STA. TO STA.

F.A.P RTE.	SECTION	COUNTY	TOTAL SHEETS	SHEET NO.
331	(1X-1)R-5,RS-3,N-5,TS-4	WILLIAMSON	288	18
		CONTRACT NO. 78203		
		ILLINOIS FED. AID PROJECT		