F.A.I.	SECTION	COUNTY	TOTAL SHEETS	SHEET NO.
94/90	*	COOK	588	426
STA.		TO STA.		
FED. ROAD DIST. NO.	ILLINOIS	FED. AID PROJECT		

62303 *(2021-922 PT2 ETC 2324.6-1P) R-11

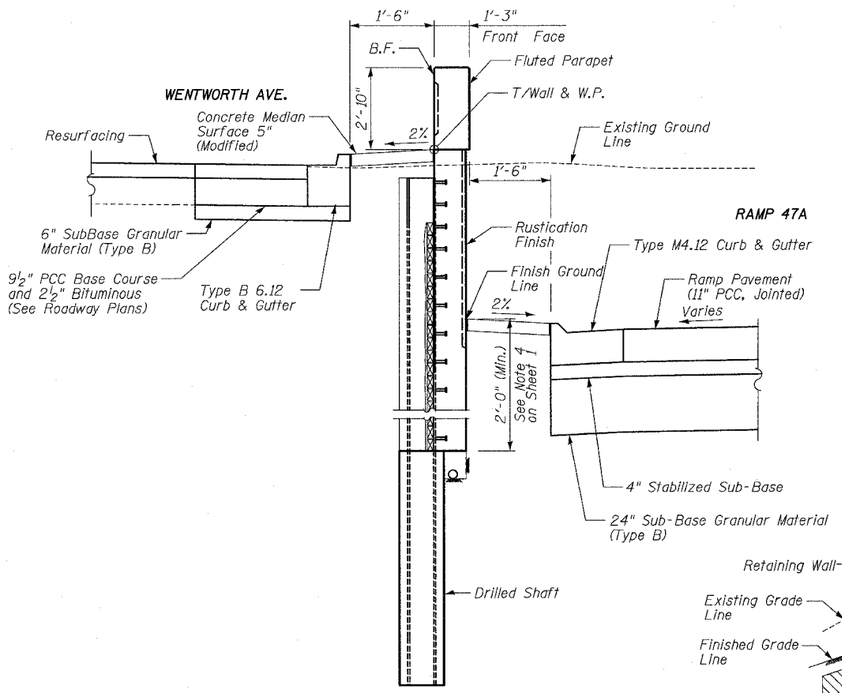

TYPICAL SECTION, STA. 3534+50±

(Looking Upstation)

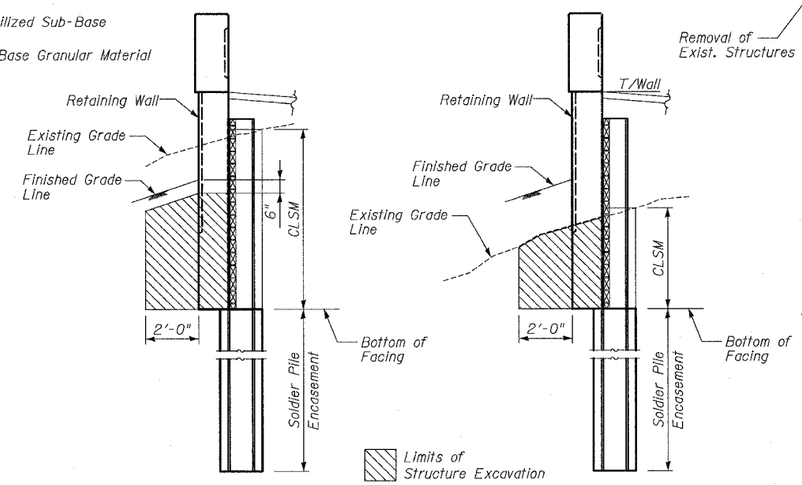

FINISHED GRADE BELOW EXIST.

FINISHED GRADE ABOVE EXIST.

LIMITS OF STRUCTURE EXCAVATION

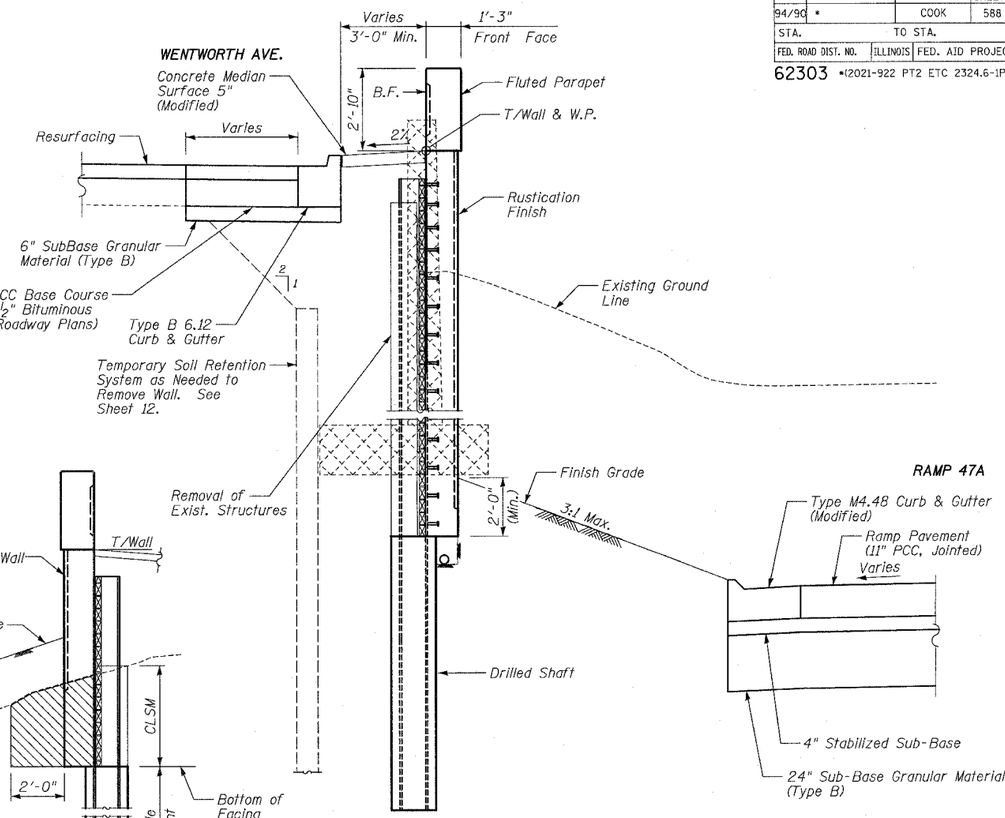

TYPICAL SECTION, STA. 3539+00±

(Looking Upstation)

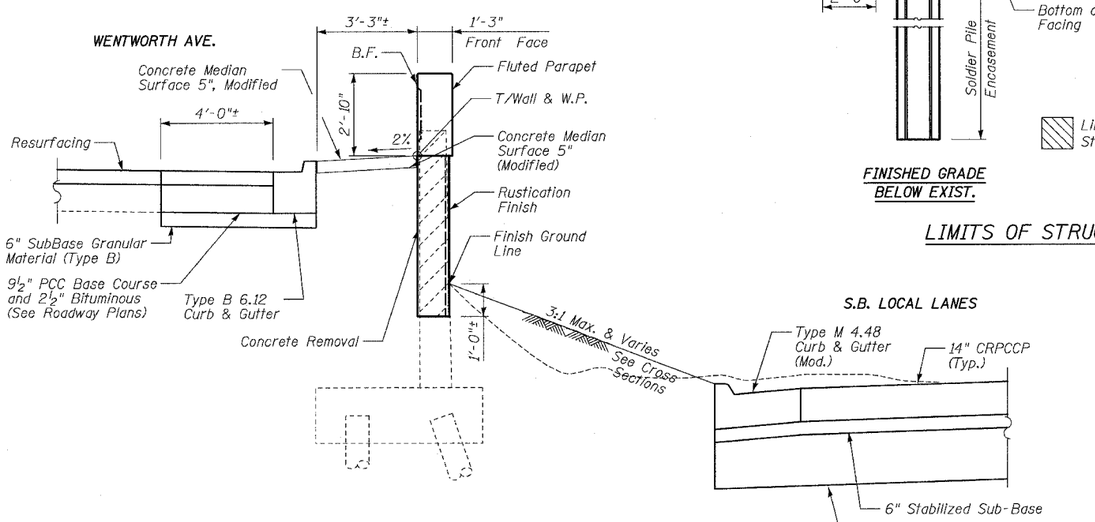

TYPICAL SECTION, STA. 3542+00±

(Looking Upstation)

Notes:

1. Dimensions not indicated are typical to all sections.
2. See Roadway Plans as required.
3. Adjust Type B Gutter and slope of finished grade as required to drain and meet elevations shown on Sheets 1 and 2.
4. For excavations and/or embankments outside limits indicated see Roadway Plans and schedules.
5. Structure Excavation limits in areas of removal of existing wall will be measured from bottom of removal limits to bottom of facing.
6. Provide Pourous Granular Embankment (Special) behind lagging (2'-0" min.) from existing or excavated ground line to bottom of Concrete Median Surface 5" (Modified).

LEGEND

- Concrete Removal
- Removal of Exist. Structures

SHEET 15 OF 24

REVISIONS	
NAME	DATE
REVISED	6/14/06
REVISED	7/13/06

ILLINOIS DEPARTMENT OF TRANSPORTATION

F.A.I. 94/90 (DAN RYAN EXPRESSWAY)

GARFIELD BLVD TO 31ST STREET (SB LOCAL LANES)

COOK COUNTY

STA. 3532+90.57 TO STA. 3543+57.42

RETAINING WALL S-45S-F

TYPICAL SECTIONS

S.N. 016-W978

SCALE: NTS DRAWN BY: KMW

DATE: JUNE 9, 2006 CHECKED BY: BLU

BOWMAN, BARRETT & ASSOCIATES INC.
CONSULTING ENGINEERS
Chicago, Illinois
312.228.0100
www.bbandainc.com

n:\660\cadd\dwlng\RET WALL\660_05MDS-45SF_02c.dgn
5:54:57 PM
7/13/2006