F.A.I.	SECTION	COUNTY	TOTAL SHEETS	SHEET NO.
94/90	*	COOK	588	458
STA.		TO STA.		
FED. ROAD DIST. NO.	ILLINOIS	FED. AID PROJECT		

62303 *(2021-922 PT2 ETC 2324.6-1P) R-11

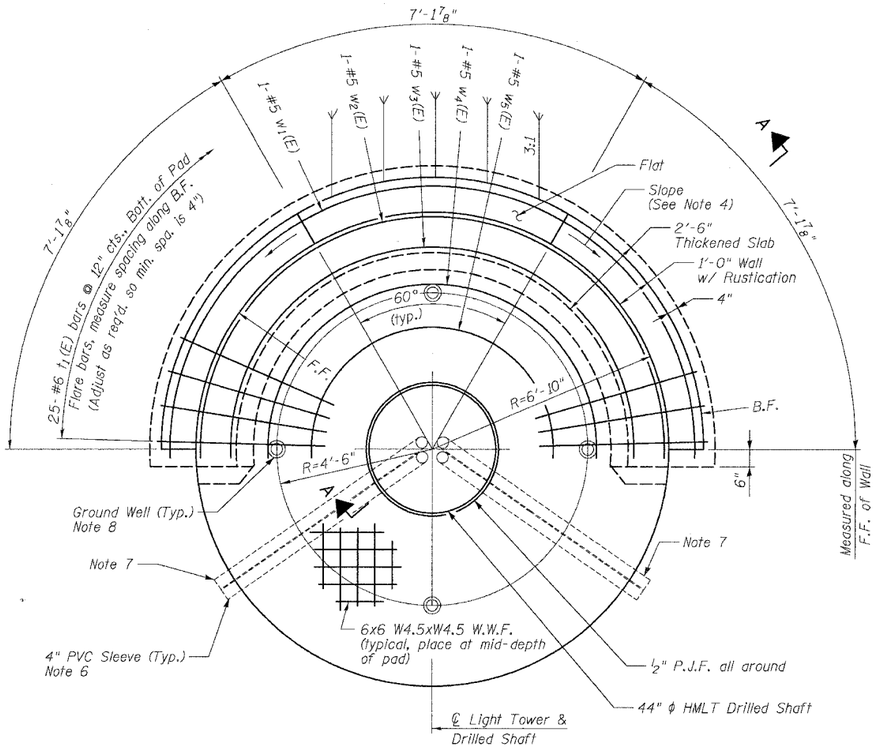

PLAN VIEW

Place Bars w_1(E) thru w_5(E) @ 12" cts., Bott. of Pad

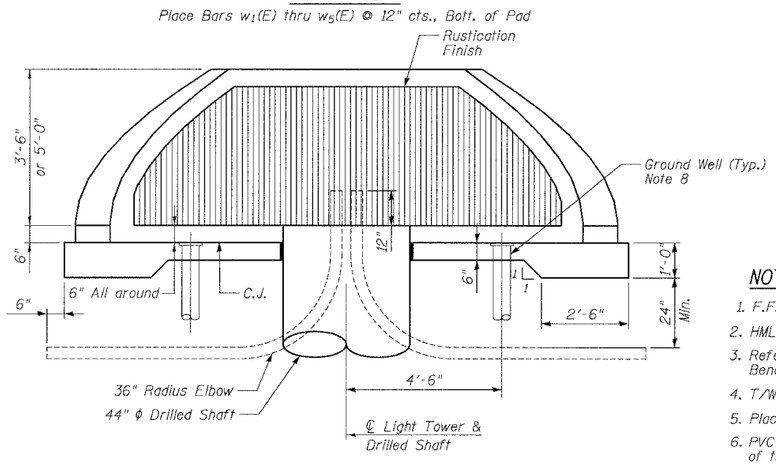

ELEVATION VIEW

(HMLT not shown for clarity)

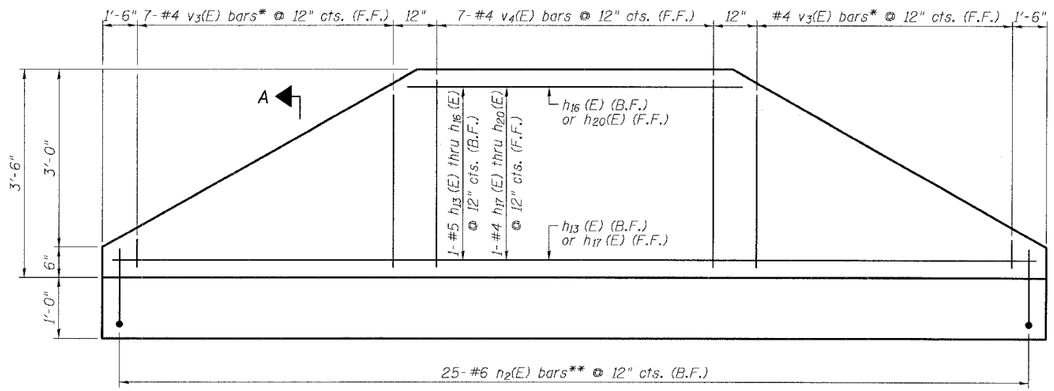

* Cut to fit, use remainder of bars at opposite end of wall. See Cutting Diagram, Sheet SD7.

** Cut to fit where necessary, discard excess.

3'-6" RETAINING WALL ELEVATION (PROJECTED)

(Looking at F.F.)

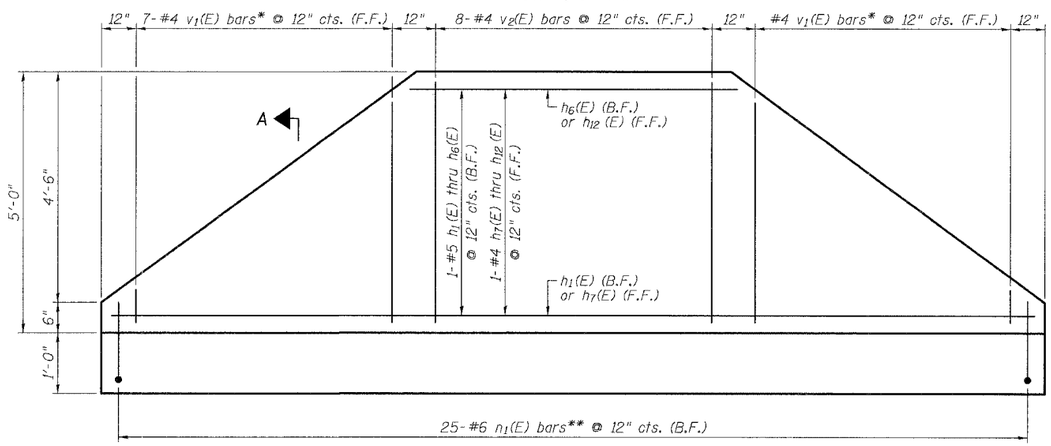

* Cut to fit, use remainder of bars at opposite end of wall. See Cutting Diagram, Sheet SD .

** Cut to fit where necessary, discard excess.

5'-0" RETAINING WALL ELEVATION (PROJECTED)

(Looking at F.F.)

NOTES

1. F.F. and B.F. denote Front Face and Back Face, respectively.
2. HMLT denotes High Mast Light Tower.
3. Refer to HMLT Service Pad & Retaining Wall Details 2 for Bar Bending Diagrams, Bill of Material, Bar Sections and Details.
4. T/Wall slope is constant along the arc of any given radius.
5. Place horizontal tails of n_1 (E) & n_2(E) bars radially.
6. PVC sleeves must be extended 6 inches beyond the edge of the concrete pad.
7. PVC sleeve for CCTV camera power feed (future). Sleeve must be capped unless noted otherwise on the plans.
8. Install ground wells 4'-6" as measured from centerline of the HMLT to centerline of the well. Adjust service pad reinforcement to miss wells. If existing ground wells present, adjust and incorporate into service pad as directed by the Engineer. Cost included with Light Tower Service Pad, 6" or Light Tower Service Pad, Special as appropriate.

BOWMAN, BARRETT & ASSOCIATES INC.
CONSULTING ENGINEERS
Chicago, Illinois
312.228.0100
www.bbandainc.com

SHEET SD6 OF SD9

REVISIONS	
NAME	DATE

ILLINOIS DEPARTMENT OF TRANSPORTATION

F.A.I. 94/90 (DAN RYAN EXPRESSWAY)
GARFIELD BLVD TO 31ST STREET (SB LOCAL LANES)

HIGH MAST LIGHT TOWER SERVICE PAD & RETAINING WALL DETAILS 1

SCALE: NTS — DRAWN BY: MTR

DATE: JUNE 9, 2006 — CHECKED BY: BLU

N:\660\cadd\civil\SHEET WALL660_SSWMDET.dgn
10:03:34 AM
6/8/2006