ROUTE NO.	SECTION	COUNTY	TOTAL SHEETS	SHEET NO.
F.A.P. 326	0910-IBR-84	KANE	62	35
FED. ROAD DIST. NO. 7	ILLINOIS	FED. AID PROJECT-		

SHEET NO. 17
32 SHEETS

Contract #62531
ISTHA Contract #RR-02-5129
ISTHA Bridge No. 1101

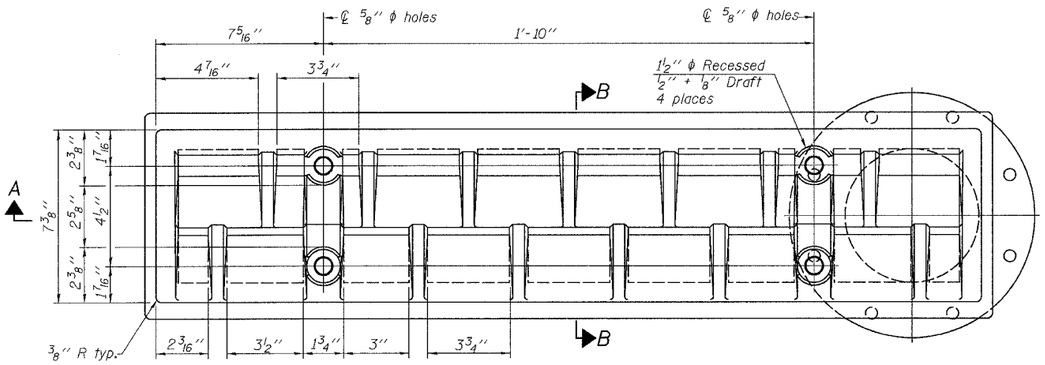

PLAN

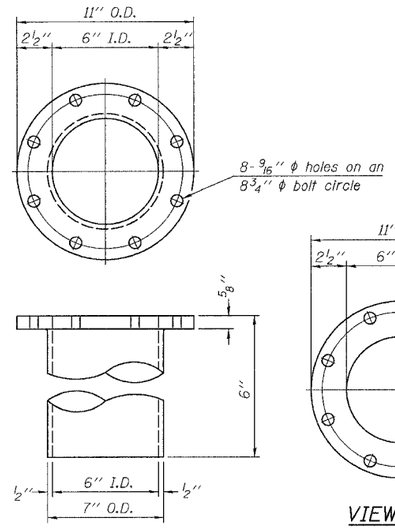

DOWNSPOUT

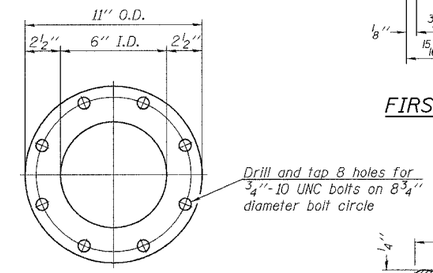

VIEW C-C

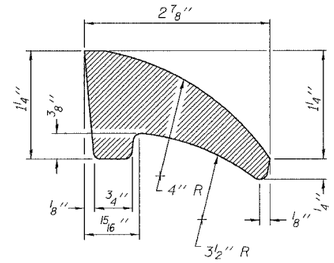

FIRST VANE DETAIL

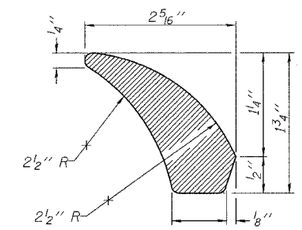

SECOND VANE DETAIL

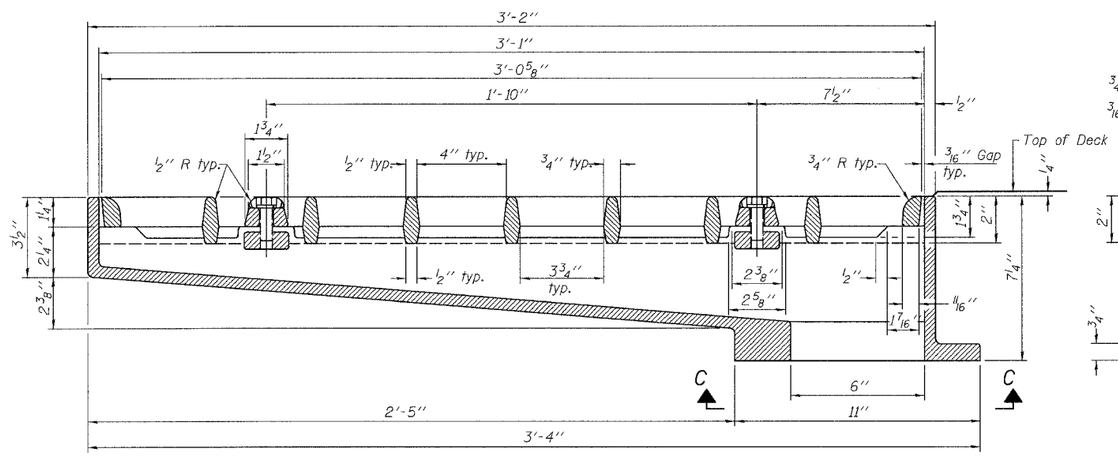

SECTION A-A

See sheet 15 of 32 for scupper location relative to parapet.

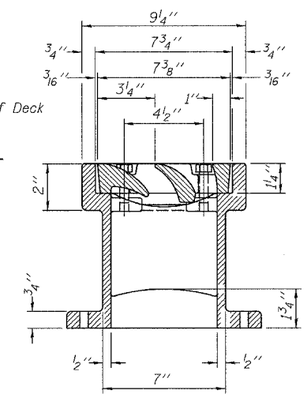

SECTION B-B

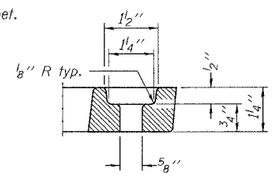

BOLT HOLE DETAIL

Notes:

All cast iron parts shall be gray iron conforming to the requirements of AASHTO M 105, Class 35B.

Bolts, anchor studs, washers and nuts shall conform to the requirements of ASTM A 307 and shall be galvanized according to AASHTO M 232.

The grate, frame and downspout shall be galvanized according to AASHTO M 111 and ASTM A 385. Downspouts located on the exterior side of a painted steel fascia beam shall be painted with the finish coat specified for the exterior side of the fascia beam.

As an alternate, bolts, anchor studs, washers and nuts may be stainless steel according to Article 1006.29(d) of the Standard Specifications.

Structural steel weldments of equal sections and of the same configuration may be substituted for cast iron. Fillet or full penetration welds shall be used for the weldments. Details shall be submitted to the Engineer for approval.

The Contractor shall take apropriate measures to assure that Protective Coat is not applied to the scupper.

Cost of the Grate, Frame, Downspout, Anchor Studs, Bolts, Washers and Nuts including complete installation of the scupper shall be paid for at the contract unit price each for Drainage Scupper, DS-33.

See Sheet 18 of 32 for Drainage System Details.

See Sheet 13 of 32 for Scupper location.

BILL OF MATERIAL

ITEM	UNIT	QUANTITY
Drainage Scupper, DS-33	Each	2

rjngroup
Excellence through Ownership

200 West Front Street
Wheaton, Il 60187

ILLINOIS DEPARTMENT OF TRANSPORTATION

DRAINAGE SCUPPER, DS-33
IL RTE. 47 OVER I-88 (E-W TOLLWAY)
KANE COUNTY
STRUCTURE NO. 045-0082

DRAWN BY BLB
DATE: 2-01-2006 CHECKED BY WJV

K:\11182521\Structures\IL-47 over I-88\Final_Plans_Revised.dgn
5/5/2006