STATE OF ILLINOIS
DEPARTMENT OF TRANSPORTATION

ROUTE NO.	SECTION	COUNTY	TOTAL SHEETS	SHEET NO.
FAI 90/94	*	COOK	344	226
FEDERAL DISTRICT		ILLINOIS	PROJECT	

Sheet No 7 of 8 Sheets

* 2003-029-I
CONTRACT #62581

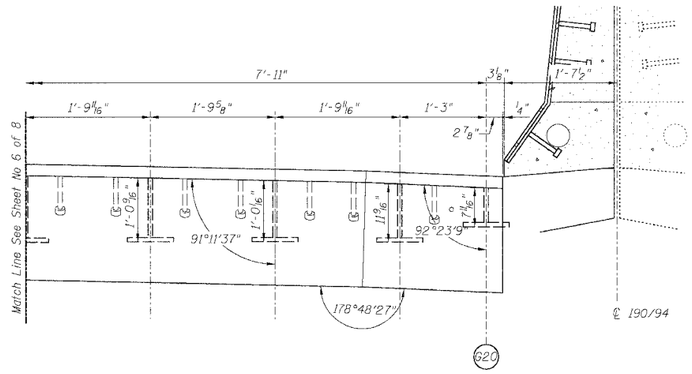

SECTION A-A

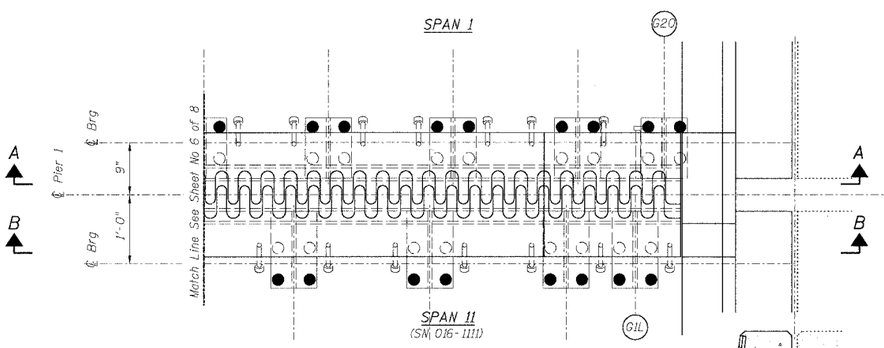

PLAN OF FINGER PLATE AT PIER 1 (SOUTHBOUND)

For location of splice with respect to fingers see Flame Cutting Diagram, Sheet No. 4.

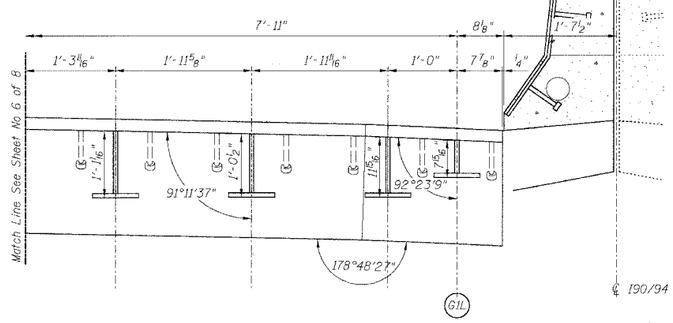

SECTION B-B

Note:
For optional splice detail see
flame cutting diagram on Sheet No. 4

PIER NO. 1

FINGER PLATE PLAN AND ELEVATION DETAILS

REVISIONS		
No.	DATE	INITIALS
1		
2		
3		
4		
5		
6		
7		
8		
9		
10		

STATE OF ILLINOIS
DEPARTMENT OF TRANSPORTATION
DIVISION OF HIGHWAYS

FAI RTE 90/94 SB — DAN RYAN EXPRESSWAY
SN 016-1110 (SOUTHBOUND)
SEC 2003-029-I — COOK COUNTY

HOMER L. CHASTAIN & ASSOCIATES
CONSULTING ENGINEERS
8609 W. BRYN MAWR AVENUE
SUITE 204
CHICAGO, ILLINOIS 60631
312-714-0260
FAX 312-714-0056

DRAWN BY	DATE RLK 5/03
CHECKED BY	DATE SDS 5/03
BOOK NUMBER	
PROJECT No.	4222-3
SHEET No.	