ROUTE NO.	SECTION	COUNTY	TOTAL SHEETS	SHEET NO.
F.A.P. 693	(119B-3)I	TAZEWELL	34	13
FED. ROAD DIST. NO. 7	ILLINOIS	FED. AID PROJECT-		

SHEET NO. 4
14 SHEETS

Contract #68415

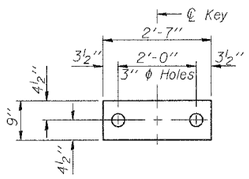

FABRIC BEARING PAD
(Interior)

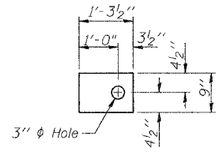

FABRIC BEARING PAD
(Exterior)

FIXED

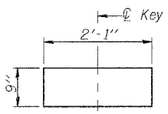

FABRIC BEARING PAD
(Interior)

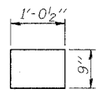

FABRIC BEARING PAD
(Exterior)

EXPANSION

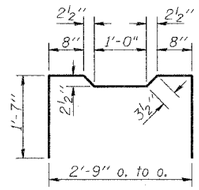

BAR A_1

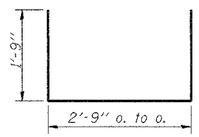

BARS U & U_1

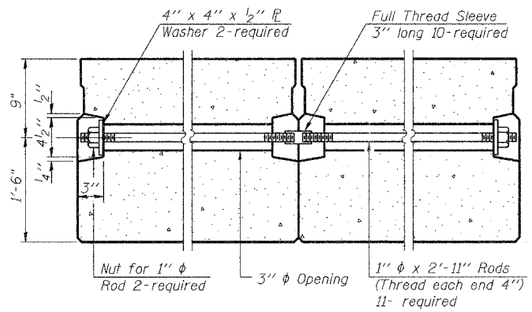

TYPICAL TRANSVERSE TIE ASSEMBLY

*0.2 x Length of beam

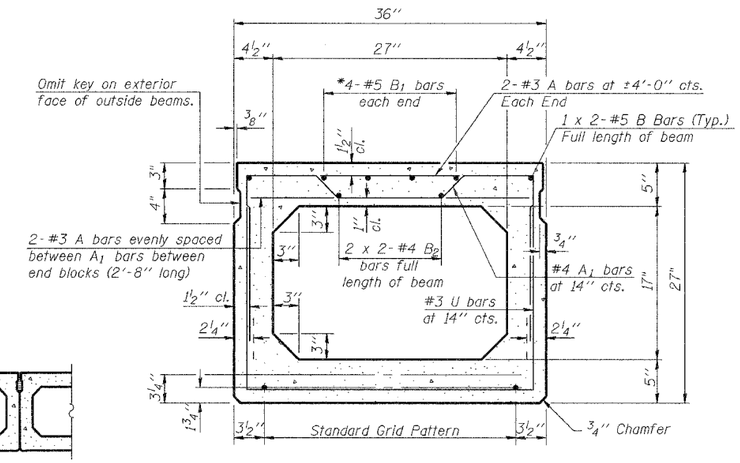

TYPICAL SECTION

½" ϕ Strands, Each Strand Stressed to 30,900 Lbs.
6-Strands 1¾" up, 6-Strands 3¼" up, 2-Strands 4½" up

Note:
Place strands symmetrically about ℄ of beam.

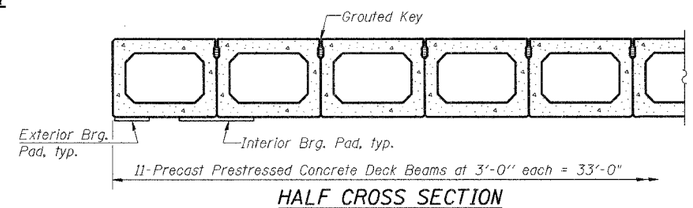

HALF CROSS SECTION

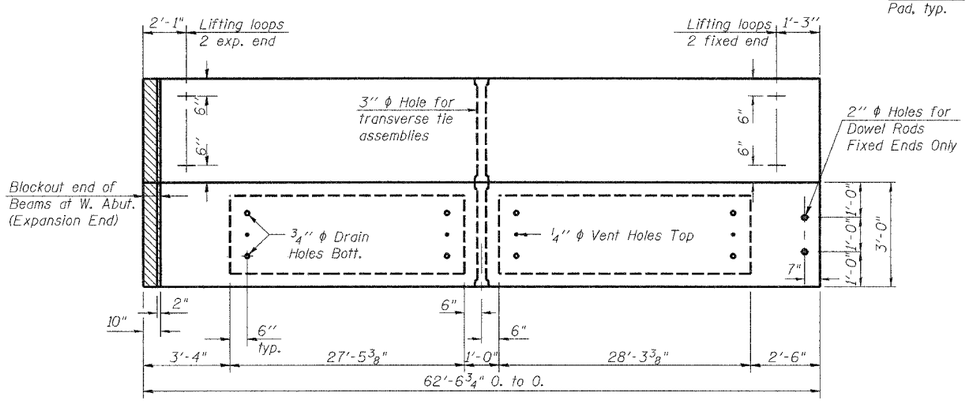

PLAN

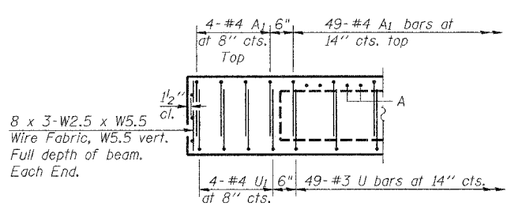

END ELEVATION
(Fixed End)

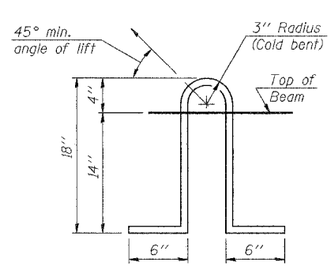

LIFTING LOOP DETAIL

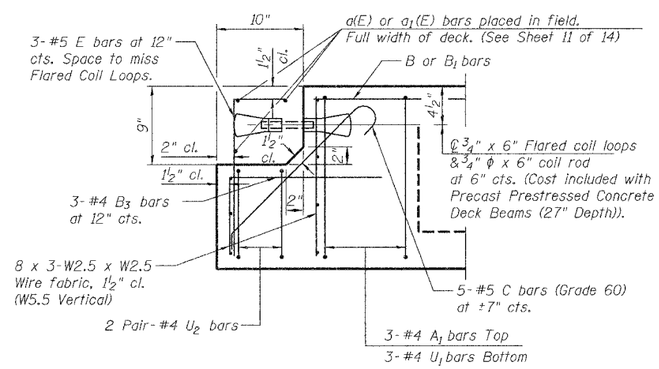

END OF BEAM (EXP. END)
(Dimensions are at Rt. L's)

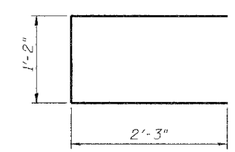

BAR U_2

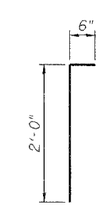

BAR E

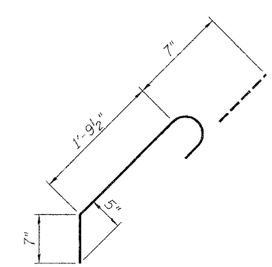

BAR C

NOTES

Prestressing steel shall be uncoated high strength, low relaxation 7-wire strand, Grade 270. The nominal diameter shall be ½" and the nominal cross-sectional area shall be 0.153 sq. in. Lifting loops shall be 3-1/2 " ϕ-270 ksi strands, as shown.

The 1" ϕ rods in the transverse tie assembly shall be tightened to a snug fit and the threads set. Pockets that receive transverse tie bar on outside shall be filled with grout after transverse tie assembly is in place.

The bearing seat surfaces shall be adjusted by shimming to assure firm and even bearing. Two ⅛" fabric adjusting shims of the dimensions of the Exterior Bearing Pad shall be provided for each bearing.

Keyway surfaces shall be cleaned to remove form oil or other bond breaking material prior to shipment of the beams. Cleaning shall be done by sandblasting the keyway areas between top of the beam and the bottom edge of the key.

Corrosion Inhibitor, as covered in the Special Provisions, shall be used in the concrete for precast prestressed concrete deck beams.

Required Release Strength, f'ci, shall be 4,000 p.s.i.

BILL OF MATERIAL

Precast Prestressed Concrete Deck Beams (27" Depth)	Sq. Ft.	2066

DESIGNED BWP	THOUVENOT, WADE & MOERCHEN, INC. ENGINEERS • SURVEYORS • PLANNERS
CHECKED ALN	TWM
DRAWN BWP	CORPORATE OFFICE 4940 OLD COLLINSVILLE RD. SWANSEA, ILLINOIS 62226 TEL (618) 624-4488 FAX (618) 624-6688 E-MAIL: corp@twm-inc.com
CHECKED KPC	

SUPERSTRUCTURE
ILLINOIS ROUTE 9 OVER
PRAIRIE CREEK
F.A.P. ROUTE 693 SECTION (119B-3)I
TAZEWELL COUNTY
SN 090-0061