STATE OF ILLINOIS
DEPARTMENT OF TRANSPORTATION

ROUTE NO.	SECTION	COUNTY	TOTAL SHEETS	SHEET NO.
F.A.S. 1671	‡	DOUGLAS	181	99
FED. ROAD DIST. NO. 7		ILLINOIS	FED. AID PROJECT-	

SHEET NO. 15
46 SHEETS

Contract #70258
‡ 22VBR-1 and 144SBR-2

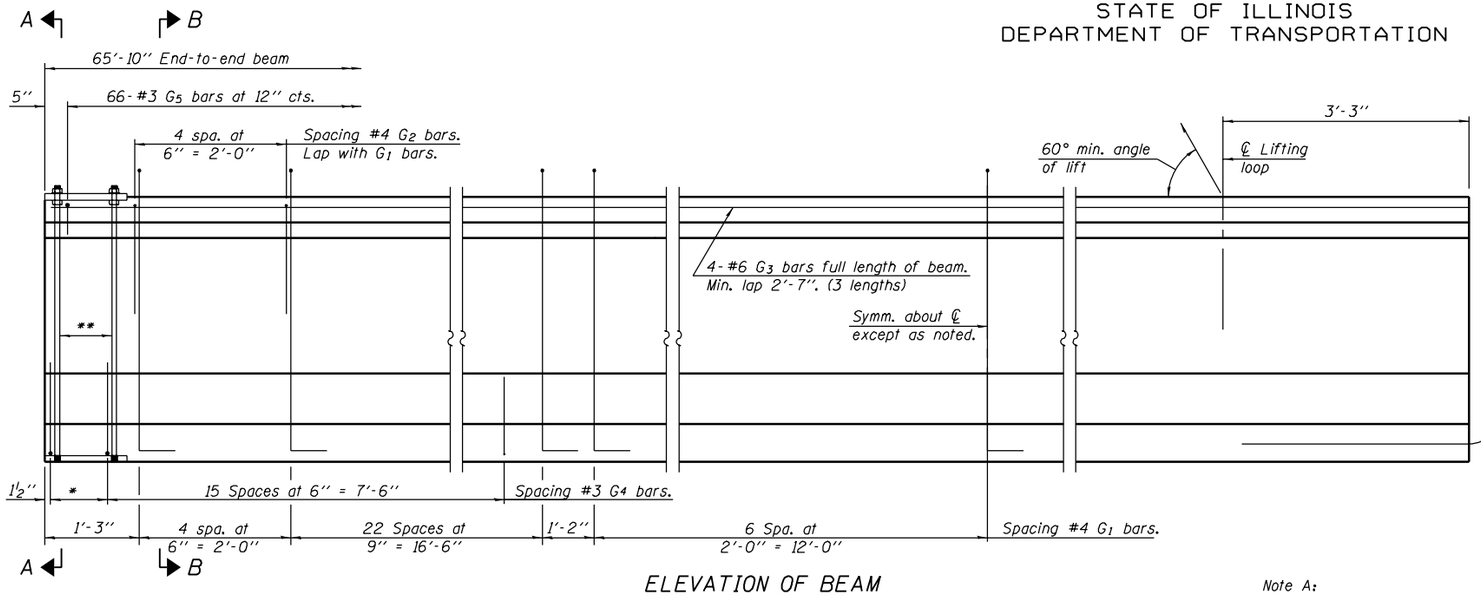

ELEVATION OF BEAM
(Showing reinforcement & dimensions)

* 3 spaces at 3" = 9".
** 4-¾" ϕ threaded dowel rods at 3" cts., each face.

Note A:
Hex nuts (top and bottom) with lock washers (top). Only tighten sufficiently to compress lock washers.

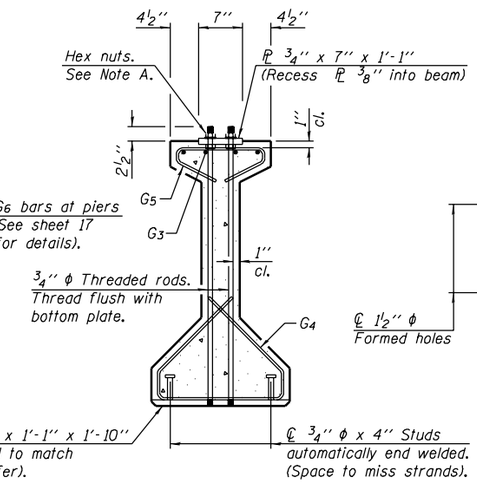

SECTION A-A

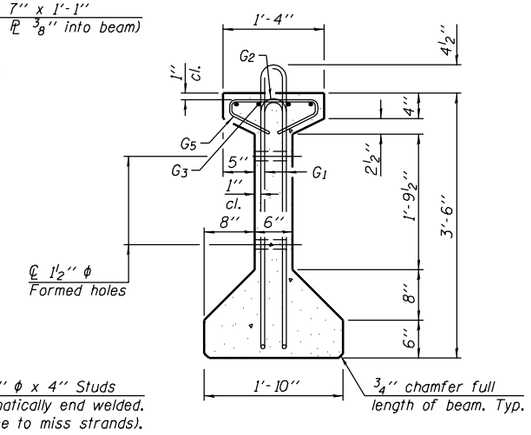

SECTION B-B

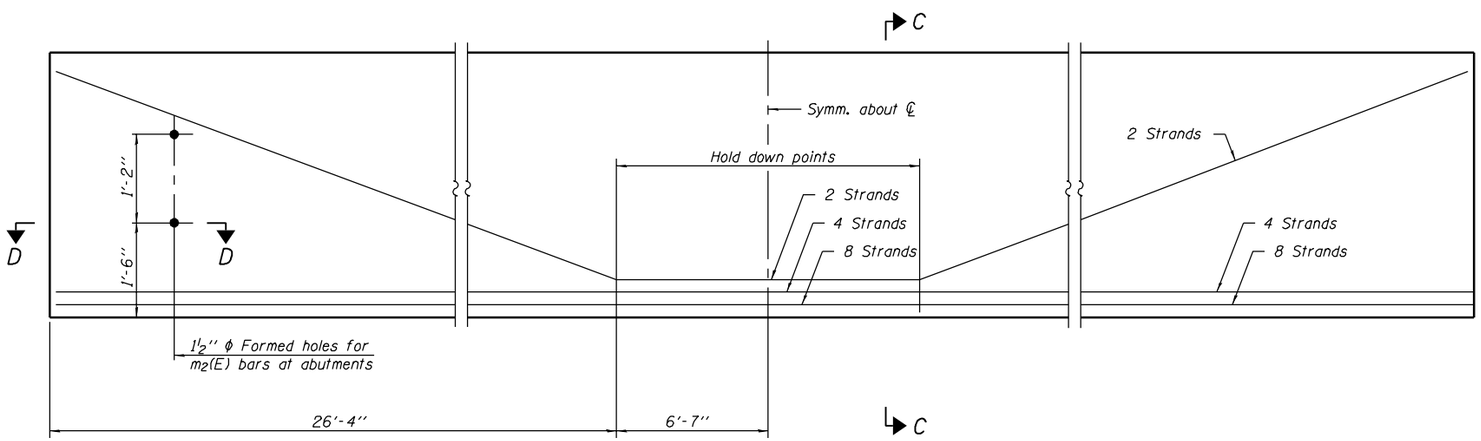

ELEVATION OF BEAM
(Showing prestressing steel)

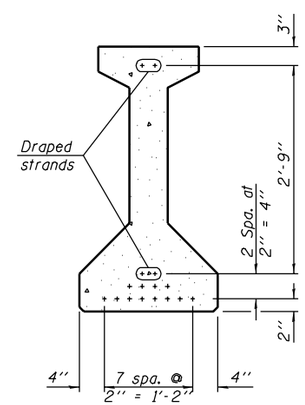

SECTION C-C

BAR LIST
ONE BEAM ONLY

Bar	No.	Size	Length	Shape
G_1	67	#4	8'-5"	
G_2	10	#4	4'-4"	
G_3	12	#6	23'-7"	
G_4	38	#3	4'-11"	
G_5	66	#3	2'-6"	
G_6	2	#8	3'-9"	

Notes:
See sheet 17 of 46 for additional details and Bill of Material.
Required release strength, f'ci, shall be 5000 psi.

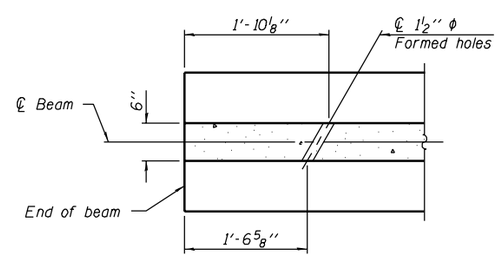

SECTION D-D

DESIGNED	Curt M. Evoy
CHECKED	Rebecca L. Tharp
DRAWN	Michael B. Mossman
CHECKED	C.M.E. / R.L.T.

August 4, 2006
EXAMINED Thomas J. Domagalski
ENGINEER OF BRIDGE DESIGN
PASSED Ralph E. Anderson
ENGINEER OF BRIDGES AND STRUCTURES

PI-4-42 7-15-05

42" PPC I-BEAM (SPANS 1 & 3)
F.A.S. RT. 1671 - SEC. 22VBR-1
DOUGLAS COUNTY
STATION 1151+65.86
STRUCTURE NO. 021-0061