ROUTE NO.	SECTION	COUNTY	TOTAL SHEETS	SHEET NO.
F.A.P. 42	2BR	WASHINGTON	33	26
FED. ROAD DIST. NO. 8	ILLINOIS	PROJECT		

Sheet 12 of 16 CONTRACT #76389

Notes: Pour steps monolithically with cap. Reinforcement bars designated (E) shall be epoxy coated.

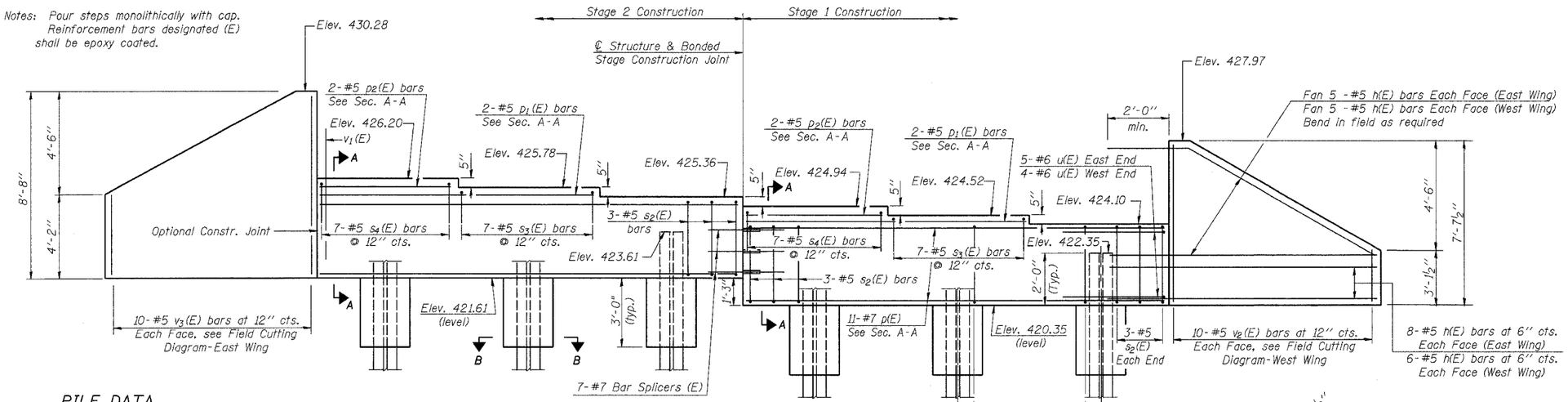

ELEVATION
(Looking South)

PILE DATA

Type: Steel HP12x53
Capacity: Driven to Refusal
Est. Length: 33 Feet
No. Required: 5+1 Test Pile

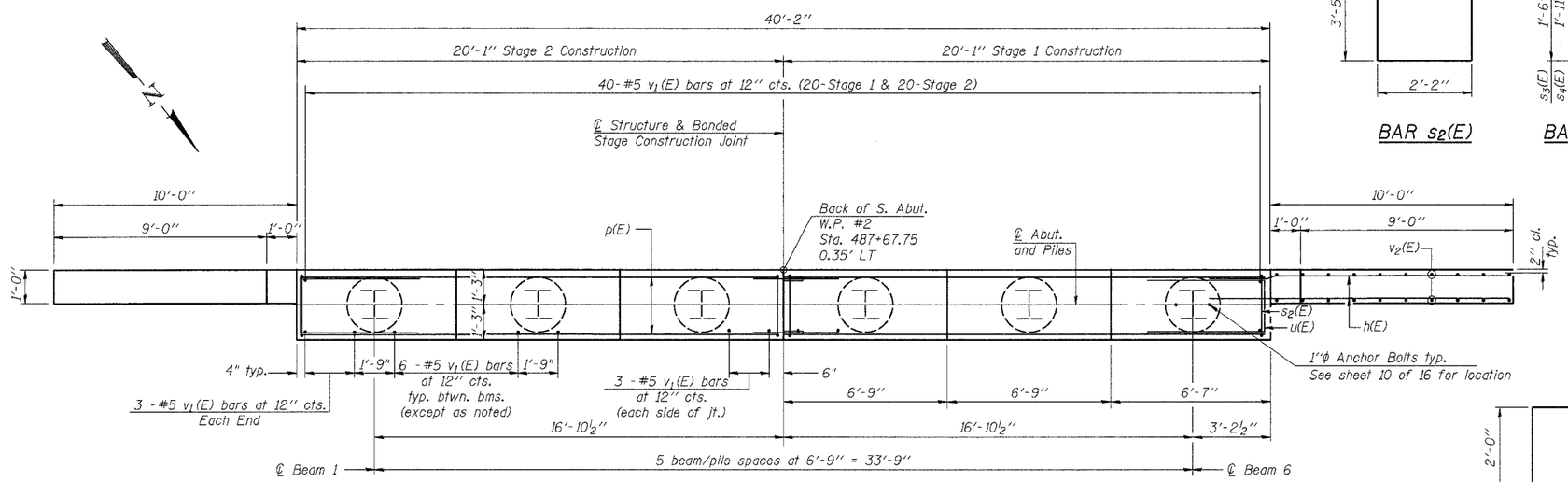

PLAN

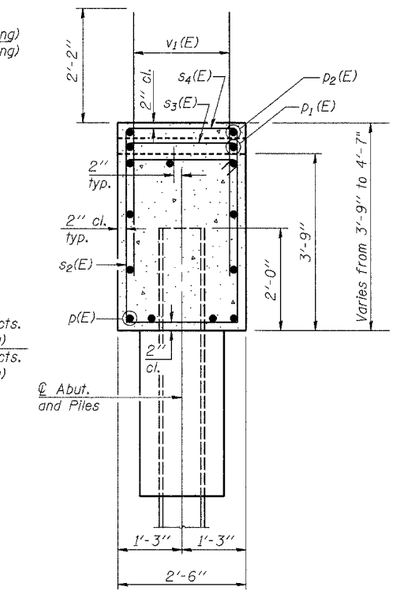

SECTION A-A

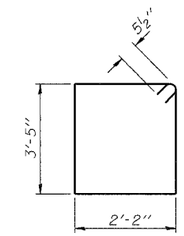

BAR s2(E)

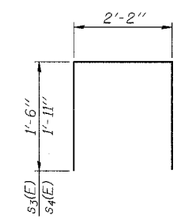

BAR s3(E) & s4(E)

BILL OF MATERIAL - SOUTH ABUT.

Bar	No.	Size	Length	Shape
h(E)	48	#5	12'-10"	
p(E)	22	#7	19'-9"	
p1(E)	4	#5	13'-0"	
p2(E)	4	#5	6'-3"	
s2(E)	36	#5	12'-1"	
s3(E)	14	#5	5'-2"	
s4(E)	14	#5	6'-0"	
u(E)	9	#6	12'-0"	
v1(E)	76	#5	4'-4"	
v2(E)	10	#5	10'-1"	
v3(E)	10	#5	12'-2"	
Concrete Structures			Cu. Yd.	20.1
Reinforcement Bars, Epoxy Coated			Pound	2970
Structure Excavation			Cu. Yd.	115
Bar Splicers			Each	7
Furnishing Steel Piles HP12x53			Foot	165
Driving Steel Piles			Foot	165
Test Pile Steel HP12x53			Each	1

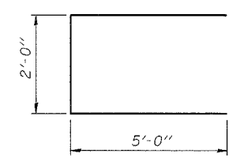

BAR u(E)

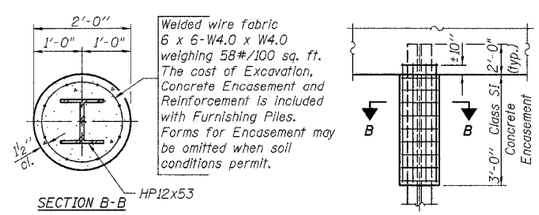

SECTION B-B

PILE ENCASEMENT DETAIL

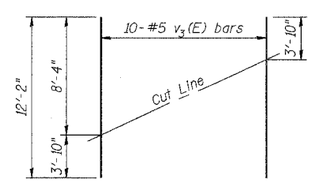

FIELD CUTTING DIAGRAM - EAST WING

Order v3(E) full length. Cut as shown and use remainder of bars in opposite face.

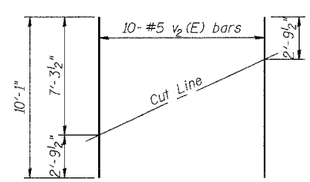

FIELD CUTTING DIAGRAM - WEST WING

Order v2(E) full length. Cut as shown and use remainder of bars in opposite face.

DESIGNED	Ruben V. Boehler
CHECKED	Tim S. Howard
DRAWN	Nicole L. Darling
CHECKED	Michael D. Cummins

SOUTH ABUTMENT

IL ROUTE 127 OVER TRIBUTARY TO CROOKED CREEK
F.A.P. ROUTE 42 SECTION 2BR
WASHINGTON COUNTY
STA. 487+25
S.N. 095-0076

CUMMINS ENGINEERING CORPORATION

JOB #: 2158
FILE: 2158ABUTS
DATE: 2/10/05