STATE OF ILLINOIS
DEPARTMENT OF TRANSPORTATION

ROUTE NO.	SECTION	COUNTY	TOTAL SHEETS	SHEET NO.
-	-	-	63	42
FED. ROAD DIST. NO. 7		ILLINOIS	FED. AID PROJECT-	

SHEET NO. 18
39 SHEETS

Contract #76899

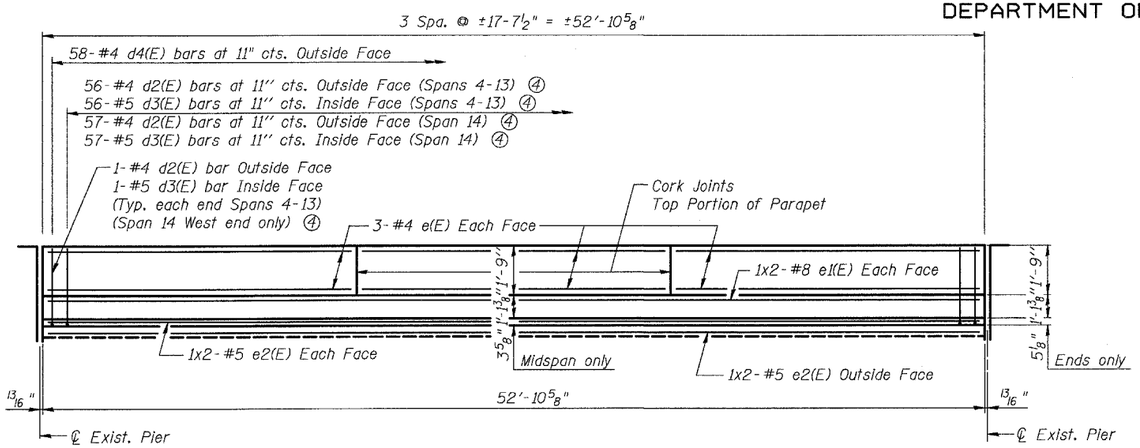

INSIDE ELEVATION OF PARAPET SPANS 4-14

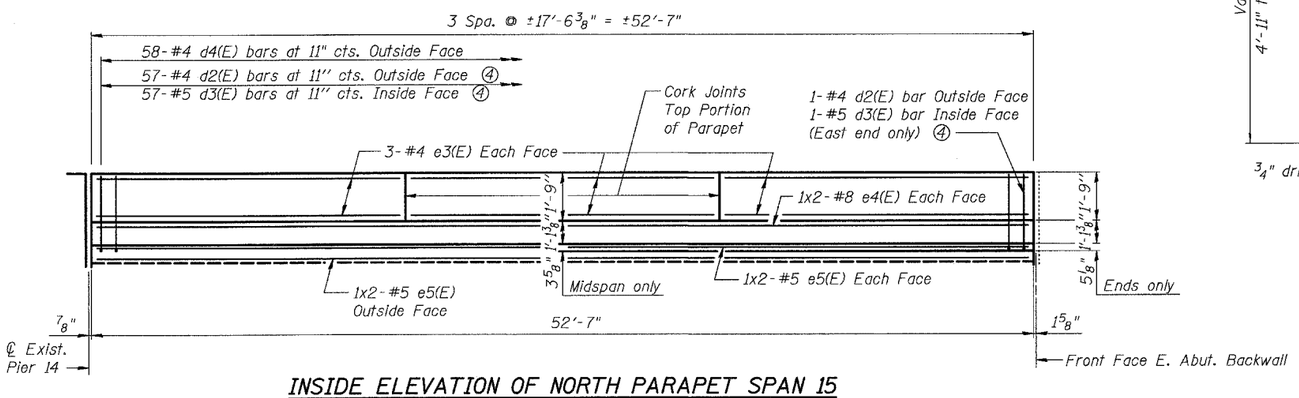

INSIDE ELEVATION OF NORTH PARAPET SPAN 15

(South parapet opposite hand)

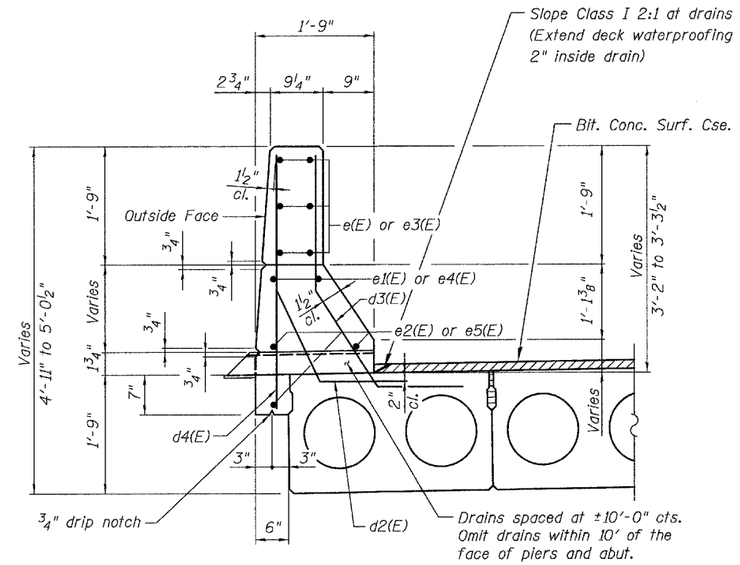

SECTION THRU PARAPET SPANS 4-15

(All edges shall have ¾" chamfers.)

SUPERSTRUCTURE BILL OF MATERIAL

Bar	No.	Size	Length	Shape
a1(E)	66	#5	14'-9"	
a2(E)	66	#5	17'-9"	
d2(E)	44	#4	4'-0"	
d3(E)	44	#5	4'-1"	
d4(E)	1,392	#4	3'-5"	
e(E)	396	#4	17'-3"	
e1(E)	88	#8	28'-6"	
e2(E)	132	#5	27'-4"	
e3(E)	36	#4	17'-2"	
e4(E)	8	#8	28'-4"	
e5(E)	12	#5	27'-2"	
Precast Prestressed Concrete Deck Beams (21" Depth)			Sq. Ft.	20,933
Reinforcement Bars, Epoxy Coated			Pound	22,100
Concrete Superstructure			Cu. Yds.	200.6

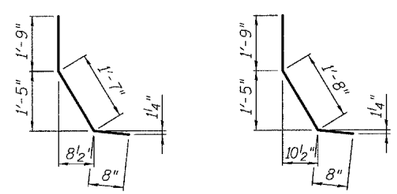

Bar d2(E)

Bar d3(E)

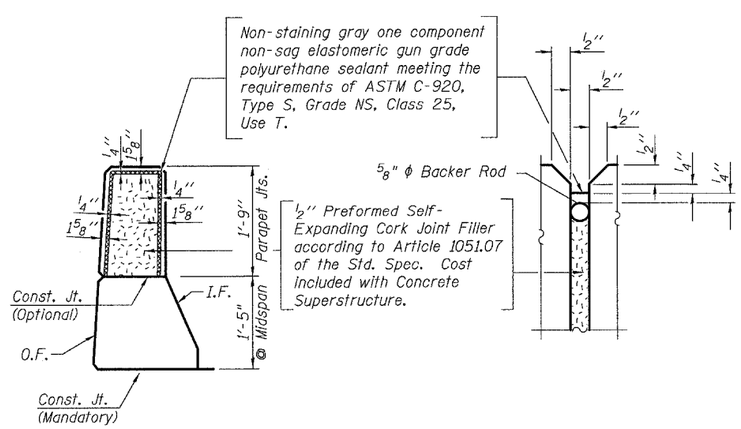

PARAPET JOINT DETAILS

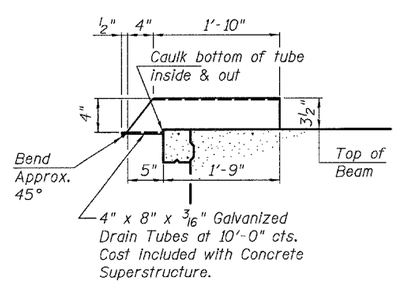

DRAIN DETAIL

Notes:

① Reinforcement bars designated (E) shall be epoxy coated.
② Bars indicated thus 1 x 2-#5 etc. indicates 1 line of bars with 2 lengths per line.
③ Minimum bar lap lengths in parapet:
#5 - 2'-2"
#8 - 4'-6"
④ Bars d2(E) & d3(E) cast with the PPC Deck Beams are included in the cost of Precast Prestressed Concrete Deck Beams (21" Depth).

SUPERSTRUCTURE DETAILS
OLD U.S. ROUTE 50 OVER
SHOAL CREEK
F.A.S. ROUTE 1780 - SECTION 24-BR-
CLINTON COUNTY
STA. 102+51.47
STRUCTURE NO. 014-0062

PLOT DATE = 05/15/2006
FILE NAME = H:\P\25004\Technical Production\Structural\SN 014-0062\final plans\0062-18-sadtsh16.dgn
PLOT SCALE = 01.0000 ':' / IN.
USER NAME = $USER$