STATE OF ILLINOIS
DEPARTMENT OF TRANSPORTATION

ROUTE NO.	SECTION	COUNTY	TOTAL SHEETS	SHEET NO.
****	**	***		20
FED. ROAD DIST. NO. 7		ILLINOIS	FED. AID PROJECT-	

Contract #76973

Sheet 4 of 4

**** 55/70
** DIST 8 ITS 2006-2
*** MADISON & ST. CLAIR & CITY OF ST. LOUIS, MO

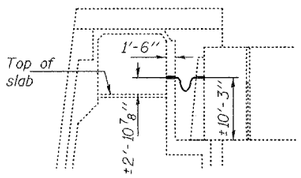

SEC A-A

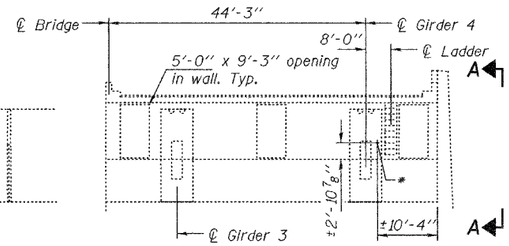

ELEVATION OF WALL ADJACENT TO GIRDERS
(Looking East)

PIER 1

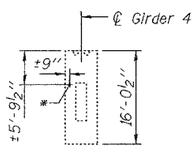

GIRDER ELEVATION
(Looking West)

* Approximate location of 3"Φ conduit hole.

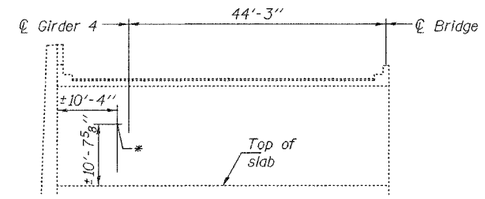

ELEVATION OF WALL ADJACENT TO GIRDERS
(Looking West)

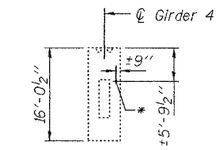

GIRDER ELEVATION
(Looking East)

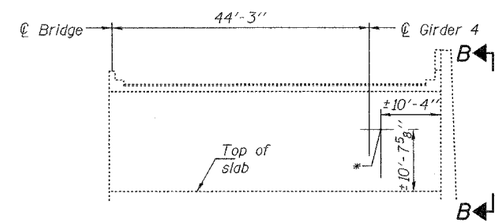

ELEVATION OF BACKWALL ADJACENT TO APPROACH SLAB
(Looking East)

PIER 6

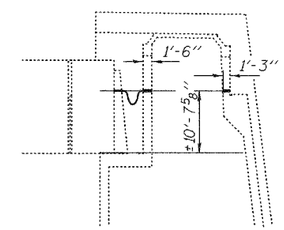

SEC B-B

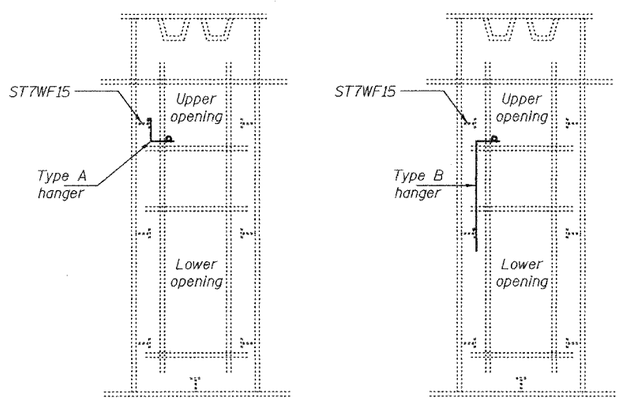

ELEVATION AT DIAPHRAGMS
(Looking West)

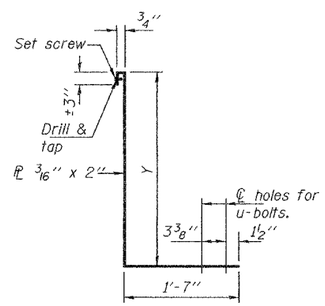

TYPE A
(Est. no. req'd. = 348)

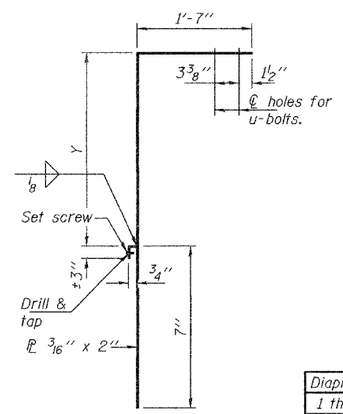

TYPE B
(Est. no. req'd. = 90)

CONDUIT HANGERS

Notes:
The conduit clamp u-bolts shall be either double nutted or lock nutted.
All structural steel shall be AASHTO M-270 Grade 36 (galvanized).
Set screw should be tightened onto the longitudinal stiffener with a flange thickness of 3/8".

Diaphragms & Stiffeners	Hanger Type	Y
1 thru 2, 146 thru 147	A	2'-8"
2 thru 47	A	1'-2"
47 thru 50	B	1'-8 1/2"
50 thru 62	B	8 1/2"
62 thru 88	A	1'-2"
88 thru 100	B	8 1/2"
100 thru 103	B	1'-8 1/2"
103 thru 146	A	1'-2"

DESIGNED	SJB
CHECKED	VHV
DRAWN	baliva
CHECKED	SJB VHV

...\projects\dab00038\0180918.dgn 8/28/2006 10:25:01 AM