ROUTE NO.	SECTION	COUNTY	TOTAL SHEETS	SHEET NO.
TR 416	05-07128-00-BR	FAYETTE	12	5
FED. ROAD DIST. NO.		ILLINOIS	PROJECT	

CONTRACT NO. 95 481

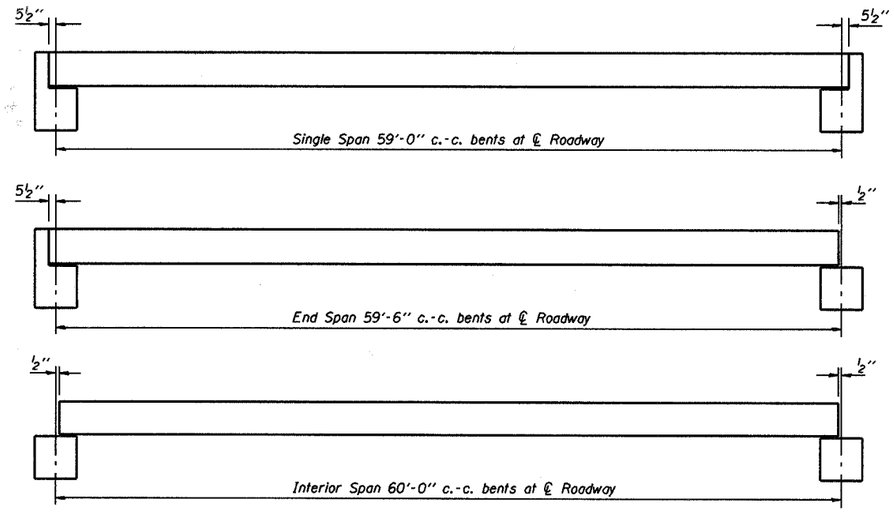

TYPICAL ELEVATIONS

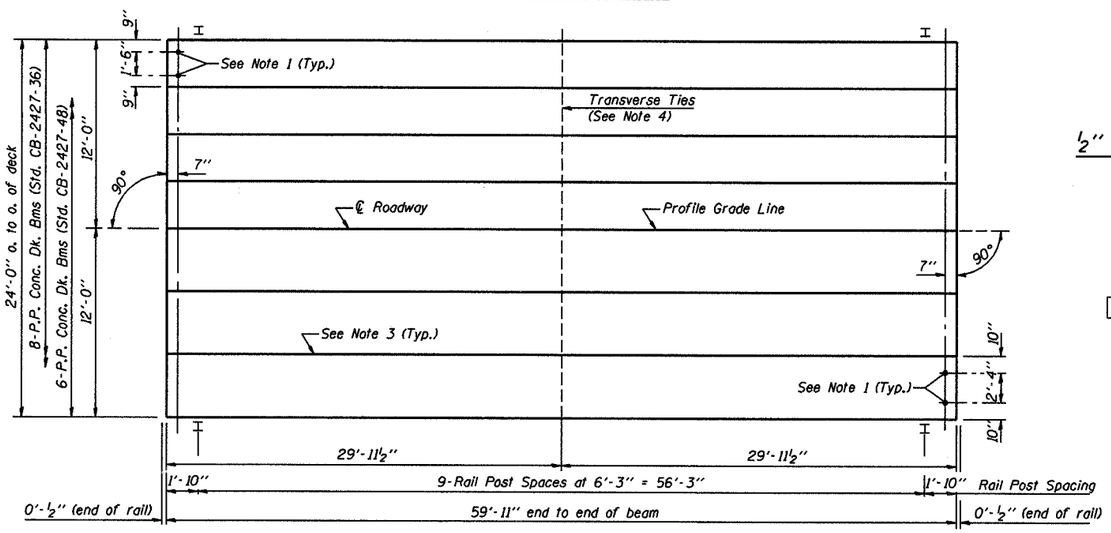

PLAN

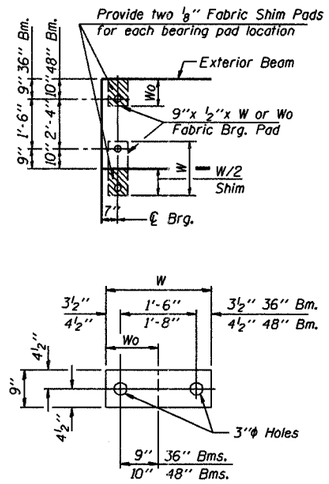

Beam	W	Wo
36"	2'-1"	1'-0½"
48"	2'-5"	1'-2½"

½" FABRIC BRG. PAD DETAILS

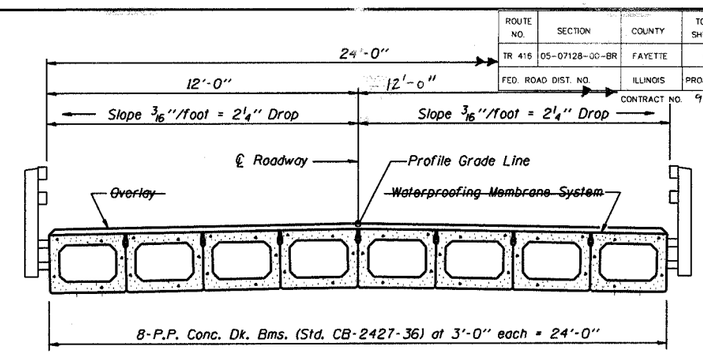

CROSS SECTION

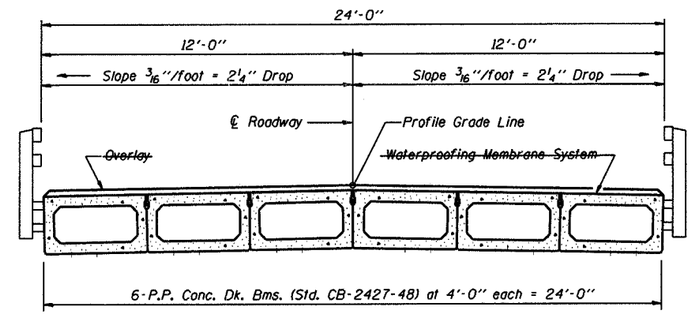

CROSS SECTION

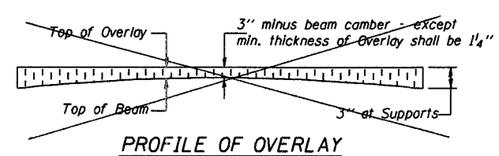

PROFILE OF OVERLAY

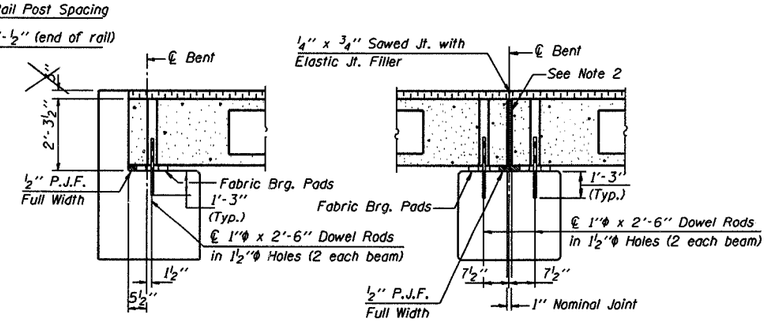

SECTION AT ABUTS.
(Along ℄ Beams)

SECTION AT PIERS
(Along ℄ Beams)

NOTES

1. After beams have been erected, holes shall be drilled into substructure and anchor dowels placed. Dowel holes shall be filled with non-shrink grout to top of beam and allowed to cure min. 24 hrs. prior to grouting the shear keys.
2. Nominal 1" joint at ℄ Pier shall be filled with non-shrink grout.
3. Longitudinal keys shall be grouted.
4. The 1" φ rods in the transverse tie assembly shall be tightened to a snug fit and the threads set. Pockets that receive transverse tie bar outside shall be filled with grout after transverse tie assembly is in place.

QUANTITIES FOR ONE SPAN

P.P. Conc. Dk. Bm. 27" Dp.	1440 Sq. Ft.	
Steel Railing	120 Ft.	
~~Waterproofing Membrane System~~	~~160.0 Sq. Yds.~~	
~~Portland Cement Mortar~~	~~420 Ft.~~	36"
~~Fairing Course~~	~~300 Ft.~~	48"

~~Note: Quantity of overlay for one span = 18.0 Tons~~

Illinois Department of Transportation

PASSED APRIL 4, 2005
Thomas J. Domagalski
Engineer of Bridge Design
APPROVED APRIL 4, 2005
Ralph E. Anderson
Engineer of Bridges and Structures

ISSUED 1-1-88

P.P.C. DECK BEAM SUPERSTRUCTURE

24' RDWY.	27" BMS.	60' SPAN	0° SKEW

STANDARD CS-2427-60