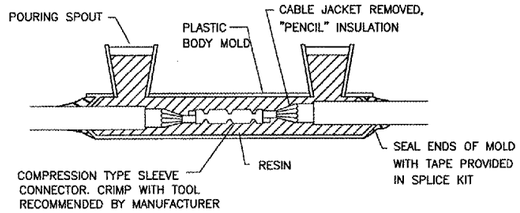

TYPE A - CABLE SPLICE

FOR SPLICES IN HOMERUNS AND FOR EXTENSIONS TO EXISTING CABLES ONLY
N.T.S.

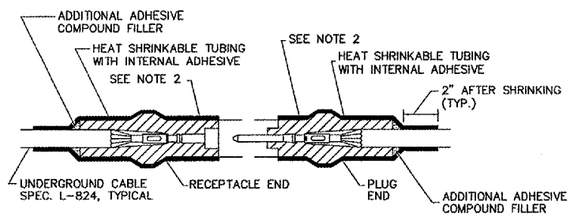

TYPE B - CABLE SPLICE

FOR SPLICES FOR USE AT JUNCTION OF HOMERUN WITH LOOP CIRCUIT
N.T.S.

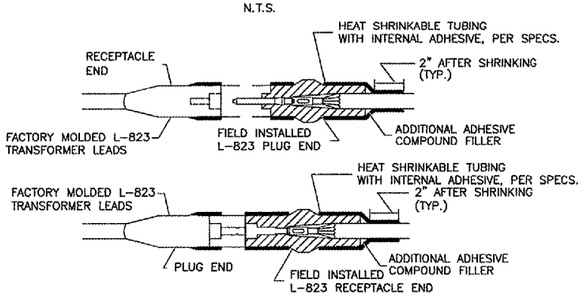

TYPE C AND D - CABLE SPLICE

FOR SPLICES AT RUNWAY/TAXIWAY LIGHTS AND SIGNS
N.T.S.

NOTES

1. INSIDE DIAMETER OF CONNECTOR SHALL PROPERLY MATCH THE OUTSIDE DIAMETER OF CABLE.
2. WRAP WITH AT LEAST ONE LAYER OF RUBBER OR SYNTHETIC RUBBER TAPE AND ONE LAYER OF PLASTIC TAPE, ONE-HALF LAPPED, EXTENDING AT LEAST 1-1/2 INCHES ON EACH SIDE OF JOINT.
3. THE COST OF FURNISHING AND INSTALLING ALL SPLICE MATERIALS SHALL BE INCIDENTAL TO THE ASSOCIATED CABLE ITEMS.
4. THE CONTRACTOR SHALL HAVE A MINIMUM OF TWO (2) TYPE A SPLICE KITS ON THE JOB SITE AT ALL TIMES FOR EMERGENCY REPAIRS.

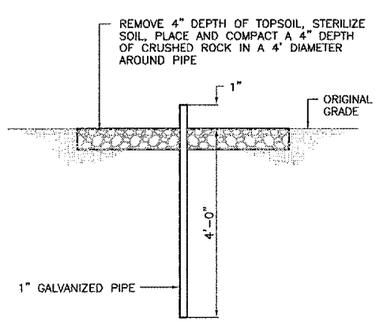

LOCALIZER GROUND CHECK POINT IN SOIL

N.T.S.

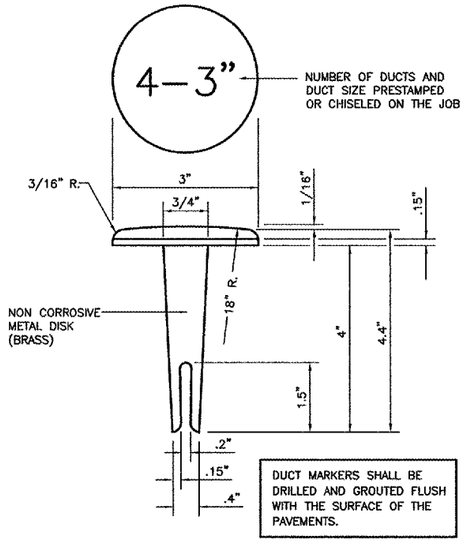

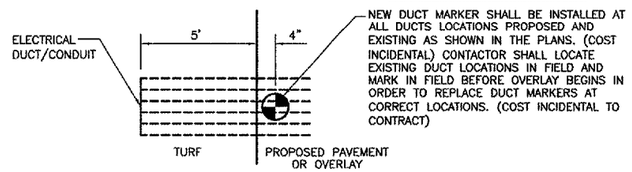

DUCT/CONDUIT MARKER DETAIL

NOT TO SCALE

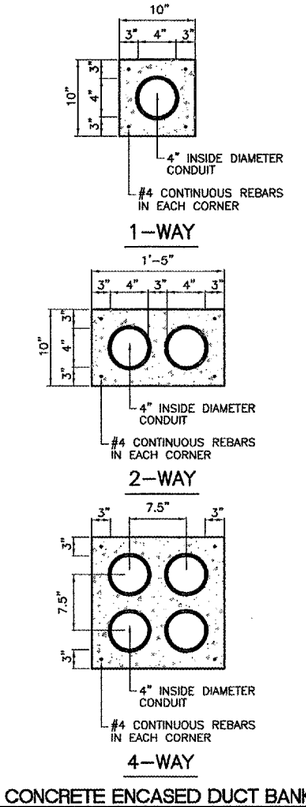

CONCRETE ENCASED DUCT BANKS

NOT TO SCALE

NOTES:

1. DIMENSIONS ARE MINIMUM.
2. CONCRETE SHALL CONFORM TO ITEM 610.
3. ALL CONDUIT SHALL BE SCHEDULE 40 PVC.
4. TOP OF CONCRETE ENCASEMENT IN TURF AREAS SHALL NOT BE LESS THAN 24" BELOW FINISHED GRADE.
5. 4" SPLIT DUCT SHALL BE CONCRETE ENCASED WITH 3" MINIMUM CONCRETE SURROUNDING 4" CONDUIT. COST INCIDENTAL TO SPLIT DUCT.

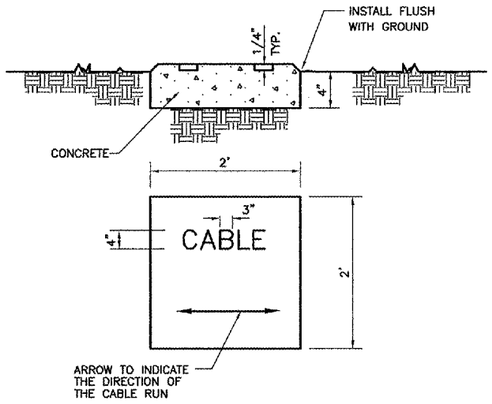

TURF CABLE MARKER DETAIL

NO SCALE

NOTES

1.) CABLE MARKERS SHALL BE INSTALLED AT ALL BENDS AND EVERY 200' ALONG THE CABLE RUN.

2.) ITEM 610 CONCRETE SHALL BE USED.

3.) ALL EXPOSED EDGES SHALL BE EDGED WITH A 1/4" RADIUS TOOL.

4.) THE COST OF FURNISHING AND INSTALLING NEW MARKERS SHALL BE INCIDENTAL TO THE ASSOCIATED CABLE ITEMS.

5.) 0.049 CU. YD. CONCRETE PER MARKER.

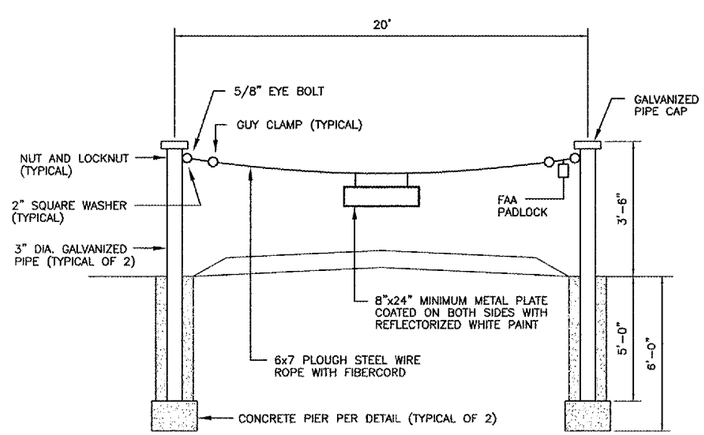

CABLE BARRIER

NOT TO SCALE

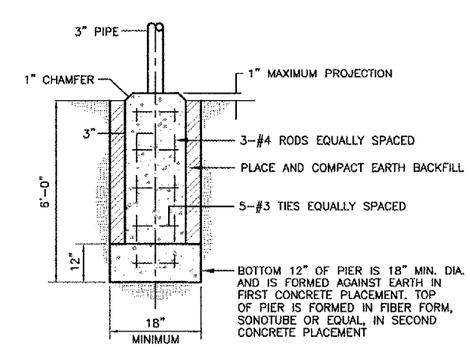

PIER FOUNDATION

NOT TO SCALE

PATH: K:\AuroraAp\0428504\Draw\Sheets
FILE: elecdtl1.dwg
UPDATE BY: johse
SURVEY BOOK #
XREF DWG:
XREF DWG:
DATE: Wed 12/15/04 5:39pm

REVISIONS		
NUMBER	BY	DATE

0 1 2
THIS BAR IS EQUAL TO 2" AT FULL SCALE (34X22).

AURORA MUNICIPAL AIRPORT
AURORA, ILLINOIS
CONSTRUCT RUNWAY 33 ILS,
RELOCATE RUNWAY 9 LOCALIZER

ELECTRICAL/MISCELLANEOUS DETAILS

© Copyright CMT, Inc.

CMT
CRAWFORD, MURPHY & TILLY, INC.
CONSULTING ENGINEERS
License No. 184-000613

DESIGN BY:	CAL
DRAWN BY:	JRO
CHECKED BY:	CAL
APPROVED BY:	
DATE:	05/12/06
JOB No:	04285-04

ILLINOIS PROJECT: ARR-3468
A.I.P. PROJECT: 3-17-0003-B31
FINAL SUBMITTAL