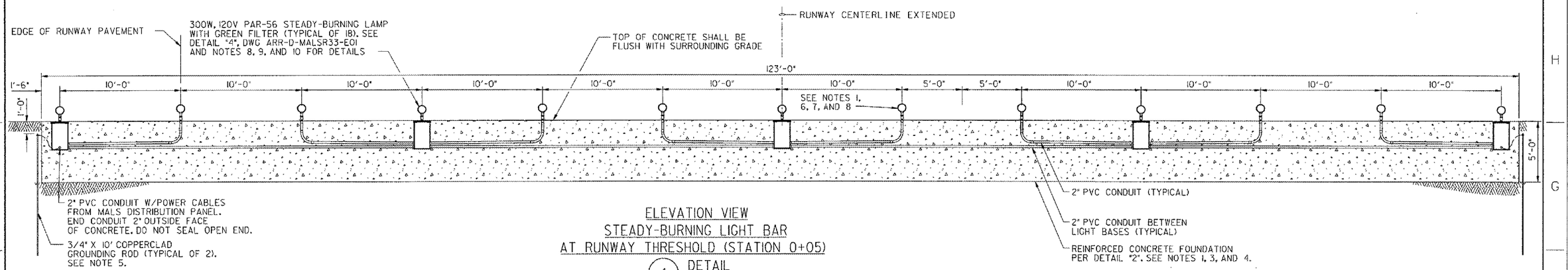

ELEVATION VIEW
STEADY-BURNING LIGHT BAR
AT RUNWAY THRESHOLD (STATION 0+05)
1 DETAIL

4 0 4 8
SCALE IN FEET

NOTES:

1. SEE DWG ARR-D-MALSR33-C01FOR LAMP CENTERLINE AND FOUNDATION TOP ELEVATIONS.
2. RIGID STEEL COUPLINGS SHALL BE INSTALLED PLUMB. THE TOP OF THE COUPLING SHALL PROTRUDE 1/4" ABOVE THE TOP OF THE CONCRETE FOUNDATION. INSTALL A SHORT NIPPLE INSIDE THE RIGID STEEL COUPLING TO PROVIDE A STOP FOR THE FRANGIBLE COUPLING SO THAT THE TOP THREAD OF THE FRANGIBLE COUPLING IS EXPOSED ABOVE THE RIGID STEEL COUPLING. TIGHTEN FRANGIBLE COUPLING AGAINST SHORT NIPPLE TO PREVENT ROTATION OF THE LAMPHOLDER. SEE SECTION 13A.2d OF THE SPECIFICATION FAA-GL-918C.
3. SEE PROJECT SPECIAL PROVISIONS FOR EXCAVATION AND BACKFILL REQUIREMENTS. EXCAVATION SHALL BE SHORED OR SHAPED PER OSHA REQUIREMENTS.
4. SEE PROJECT SPECIAL PROVISIONS FOR CONCRETE FORM WORK, REINFORCEMENT, MATERIAL, PLACEMENT, AND CURING SPECIFICATIONS.
5. ALL CONNECTIONS TO GROUNDING RODS SHALL BE MADE USING EXOTHERMIC WELDS PER SPECIFICATIONS.
6. GREEN GLASS FILTER SHALL BE INSTALLED PER NOTE 8 AND DETAIL "4", DWG ARR-D-MALSR33-E01.
7. LAMPHOLDER RETAINING RINGS SHALL BE INSTALLED ON THE PAR-56 LAMPHOLDERS. SEE NOTE 9 AND DETAIL "4", DWG ARR-D-MALSR33-E01.
8. SEE DETAIL "1", DWG ARR-D-MALSR33-E01FOR THRESHOLD BAR WIRING DETAILS.
9. SEE DETAIL "4", DWG ARR-D-MALSR33-E01FOR THRESHOLD BAR PAR-56 LAMPHOLDER ASSEMBLY DETAILS.
10. 1/4" WIDE X 1/2" DEEP CONTRACTION JOINTS SHALL BE SAWCUT INTO THE SURFACE OF THE THRESHOLD BAR FOUNDATION AT LOCATIONS SHOWN, AND SEALED.

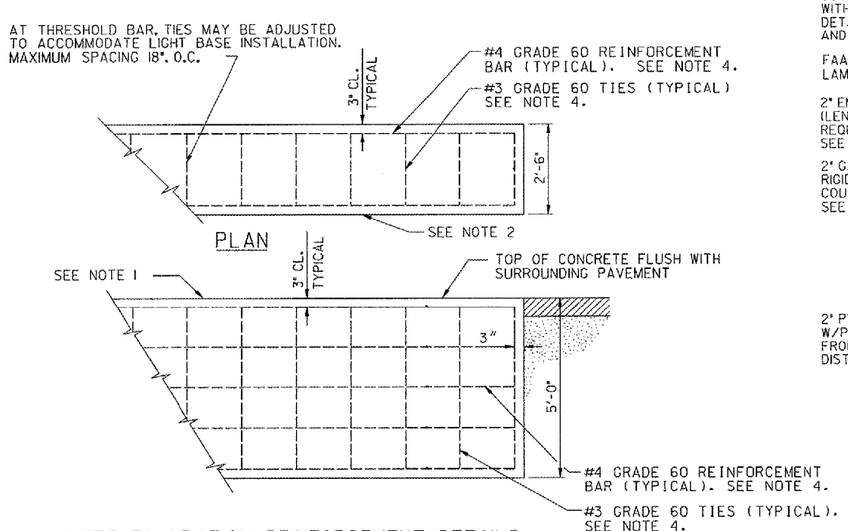

CONCRETE FOUNDATION REINFORCEMENT DETAILS
SEE NOTES 3 AND 4
2 DETAIL

2 0 2 4
SCALE IN FEET

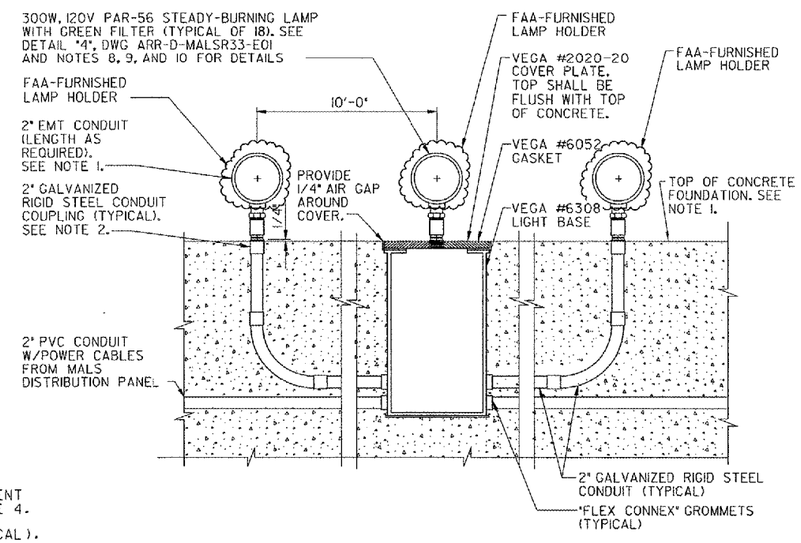

TYPICAL LIGHT BASE AND CONDUIT INSTALLATION DETAILS
3 DETAIL

1 0 1 2
SCALE IN FEET

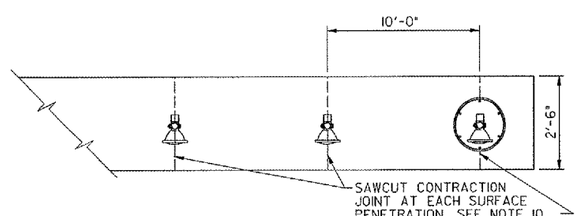

PLAN
TYPICAL CONTRACTION JOINT DETAILS
4 DETAIL

CONTRACTOR SHALL SUBMIT REQUESTS FOR SUBSTITUTION OF SPECIFIC MANUFACTURER'S ITEMS SHOWN PER PARAGRAPH 1 OF THE SPECIAL SPECIFICATIONS.

SHEET 27 OF 67

REV	DATE	DESCRIPTION	JCN	REDLINE DATE	APVD

DEPARTMENT OF TRANSPORTATION
FEDERAL AVIATION ADMINISTRATION
GREAT LAKES REGION — CHICAGO, ILLINOIS

MALSR
FOUNDATION DETAILS FOR STEADY-BURNING LIGHT BAR AT RUNWAY THRESHOLD

AURORA — AURORA MUNICIPAL AIRPORT — IL

REVIEWED BY
SUBMITTED BY
APPROVED BY
PROJ ENGR. TIMOTHY DYER
PLATFORM MGR. CLELAND MICHEEL
DESIGNED TAD
DRAWN TAD
CHECKED EGS
ISSUED BY CHICAGO NAS IMPLEMENTATION CENTER
DATE 02/17/2006
JCN
DRAWING NO ARR-D-MALSR33-C04
REV
SHEET OF

THIS DRAWING PRODUCED ON THE GREAT LAKES REGION MICROSTATION SYSTEM