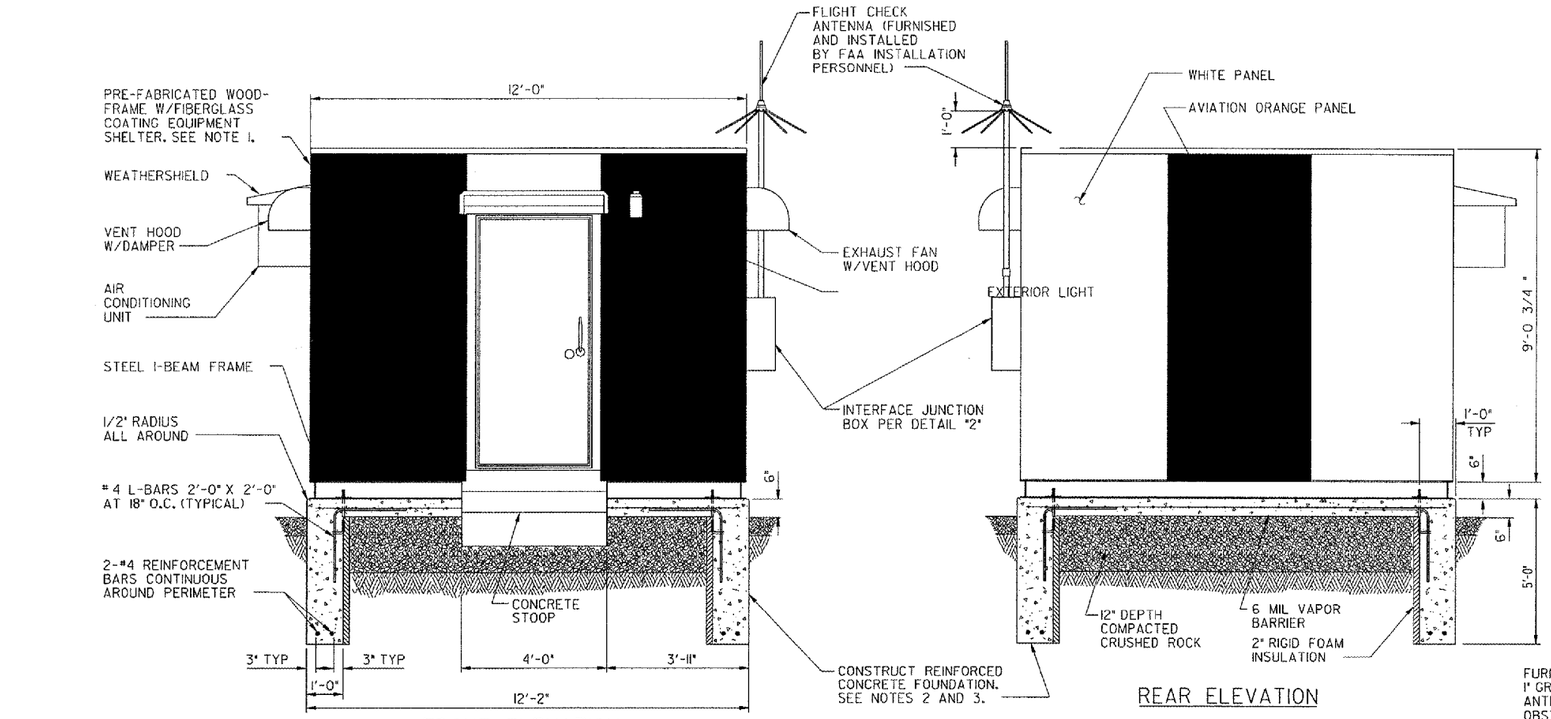

NOTES:

1. PREFABRICATED EQUIPMENT SHELTER WILL BE DELIVERED TO THE AIRPORT PER THE LOCAL FAA SECTOR FIELD OFFICE'S INSTRUCTIONS. CONTRACTOR SHALL CONTACT MR. DAN GEIST AT (815) 509-3200 TO ARRANGE PICK-UP OF THE SHELTER FROM ITS STORAGE LOCATION AND RELOCATION TO THE SITE.
2. REFER TO PROJECT SPECIAL PROVISIONS FOR EXCAVATION DETAILS.
3. REFER TO PROJECT SPECIAL PROVISIONS FOR CONCRETE DETAILS.
4. SHELTER IS DELIVERED TO SITE WITH ELECTRICAL LIGHTS, SWITCHES, RECEPTACLES, AND LOCALIZER EQUIPMENT RACK MOUNTED INSIDE. EXTERIOR ELEMENTS ARE TO BE INSTALLED BY THE CONTRACTOR AND ARE SHIPPED LOOSE INSIDE SHELTER. SEE GOVERNMENT-FURNISHED PROPERTY LIST (GFPL) FOR A COMPLETE LIST OF ITEMS DELIVERED WITH OR INSTALLED IN EQUIPMENT SHELTER.

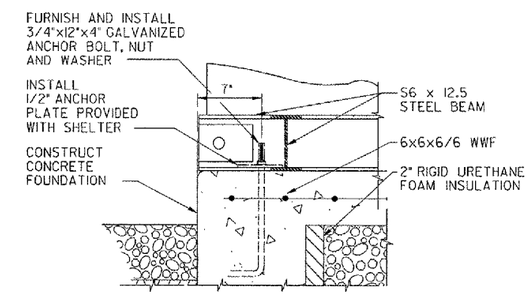

SHELTER ANCHORING DETAILS

1 DETAIL
NOT TO SCALE

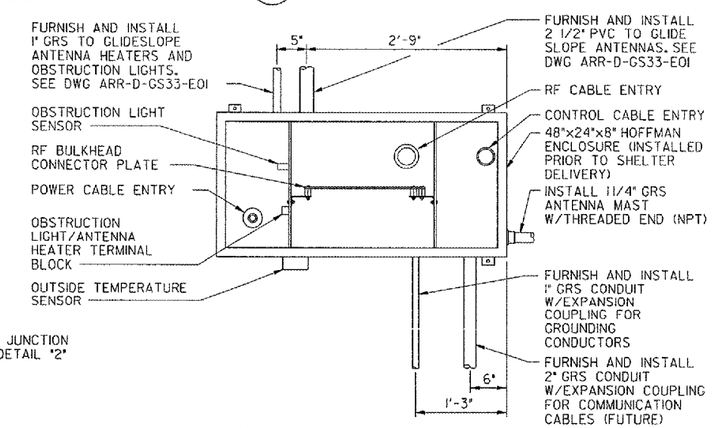

INTERFACE JUNCTION BOX

2 DETAIL

1 0 1 2
SCALE IN FEET

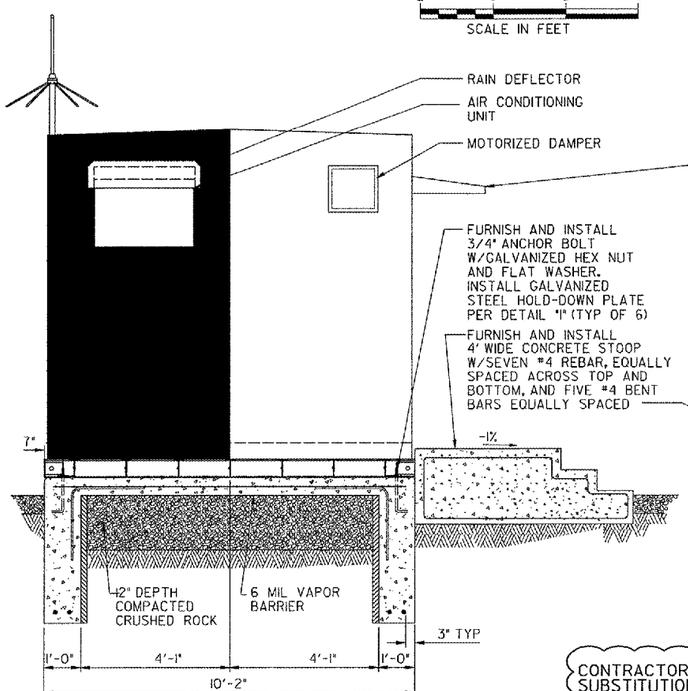

LEFT SIDE ELEVATION

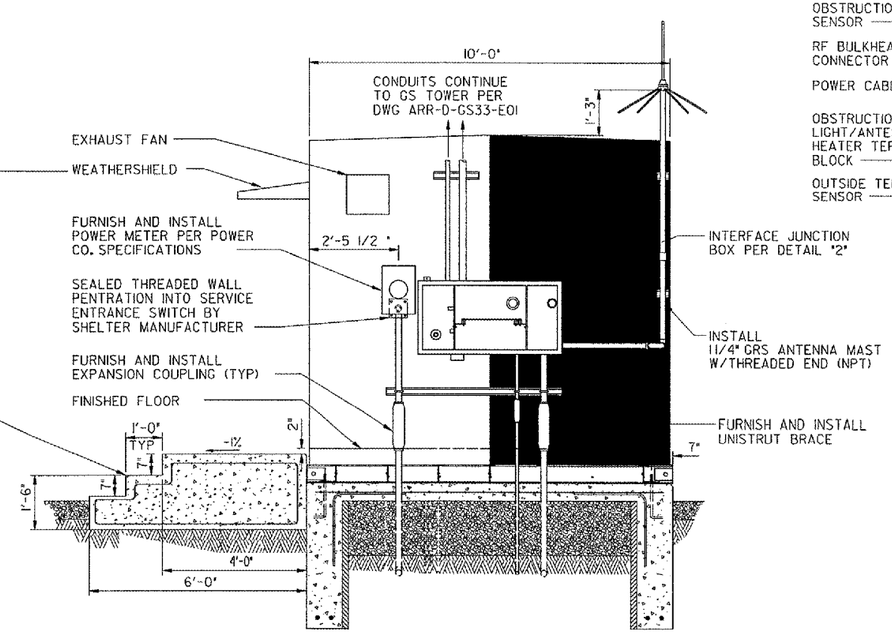

RIGHT SIDE ELEVATION

CONTRACTOR SHALL SUBMIT REQUESTS FOR SUBSTITUTION OF SPECIFIC MANUFACTURER'S ITEMS SHOWN PER PARAGRAPH 1 OF THE SPECIAL SPECIFICATIONS.

REV	DATE	DESCRIPTION	JCN	REDLINE DATE	APVD

SHEET 50 OF 67

DEPARTMENT OF TRANSPORTATION
FEDERAL AVIATION ADMINISTRATION
GREAT LAKES REGION — CHICAGO, ILLINOIS

GLIDE SLOPE

EXTERIOR ELEVATIONS AND FOUNDATION
10' X 12' PRE-FABRICATED EQUIPMENT SHELTER

AURORA — AURORA MUNICIPAL AIRPORT — IL

REVIEWED BY	SUBMITTED BY	APPROVED BY
	PROJ ENGR. TIMOTHY DYER	PLATFORM MGR. CLELAND MICHEEL
DESIGNED TAD	ISSUED BY CHICAGO NAS IMPLEMENTATION CENTER	DATE 02/27/2006 JCN
DRAWN TAD		DRAWING NO ARR-D-GS33-A01 — REV
CHECKED EGS		SHEET OF

THIS DRAWING PRODUCED ON THE GREAT LAKES REGION MICROSTATION SYSTEM

K:\Aeronav\Cad295\A\Dgns\Sheets\FAA ILS DOVIs, CUT mod. 5-10-06\ARR-D-GS33-A01.dgn
5/10/2006 5:00:25 PM BNAMES
ARC29