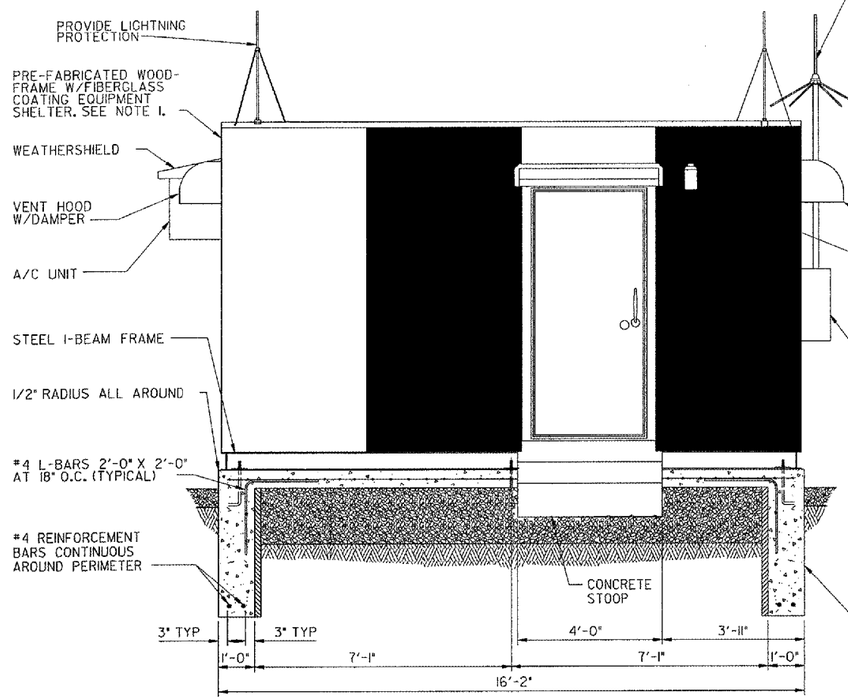

FRONT ELEVATION

SCALE IN FEET

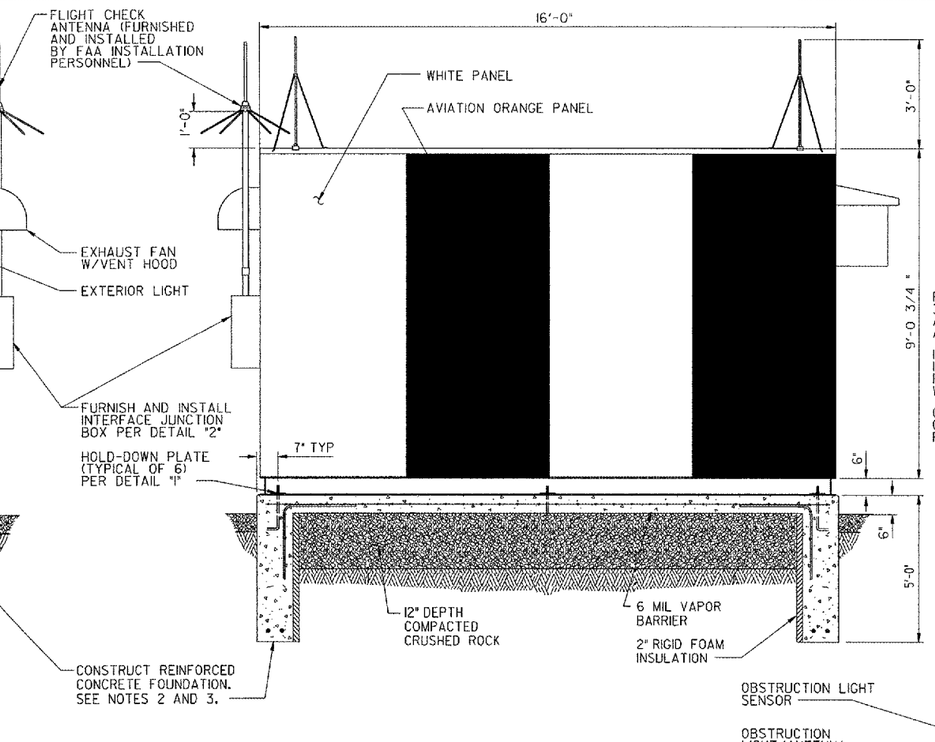

NOTES:

1. PREFABRICATED EQUIPMENT SHELTER WILL BE DELIVERED TO THE AIRPORT PER THE LOCAL FAA SECTOR FIELD OFFICE'S INSTRUCTIONS. CONTRACTOR SHALL CONTACT MR. DAN GEIST AT (815) 509-3200 TO ARRANGE PICK-UP OF THE SHELTER FROM ITS STORAGE LOCATION AND RELOCATION TO THE SITE.
2. REFER TO PROJECT SPECIAL PROVISIONS FOR EXCAVATION DETAILS.
3. REFER TO PROJECT SPECIAL PROVISIONS FOR CONCRETE DETAILS.
4. SHELTER IS DELIVERED TO SITE WITH ELECTRICAL LIGHTS, SWITCHES, RECPTACLES, AND LOCALIZER EQUIPMENT RACK MOUNTED INSIDE. EXTERIOR ELEMENTS ARE TO BE INSTALLED BY THE CONTRACTOR ARE SHIPPED LOOSE INSIDE SHELTER. SEE GOVERNMENT-FURNISHED PROPERTY LIST (GFPL) FOR A COMPLETE LIST OF ITEMS DELIVERED WITH OR INSTALLED IN EQUIPMENT SHELTER.

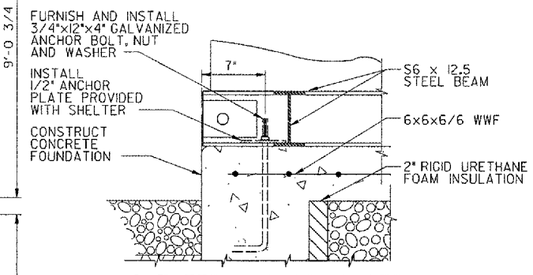

SHELTER ANCHORING DETAILS

1 DETAIL

NOT TO SCALE

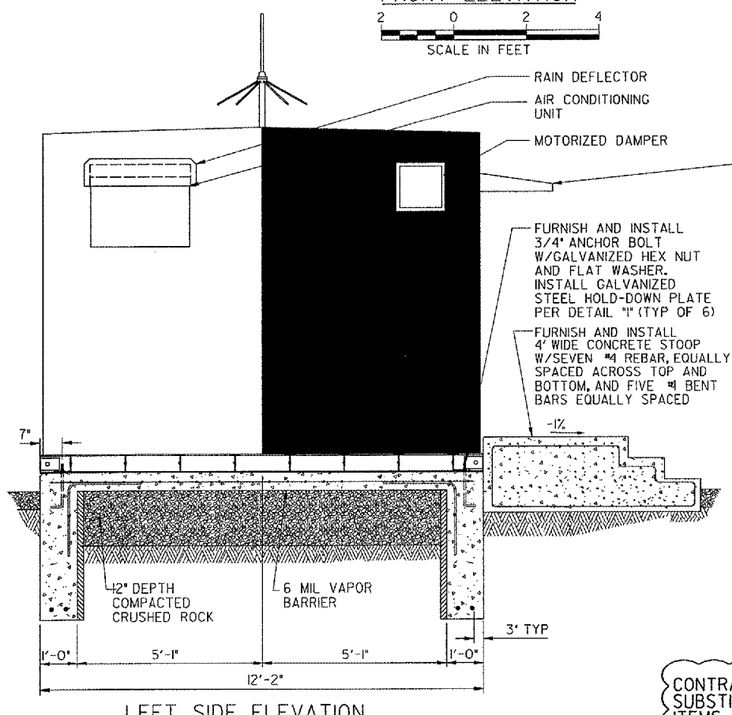

LEFT SIDE ELEVATION

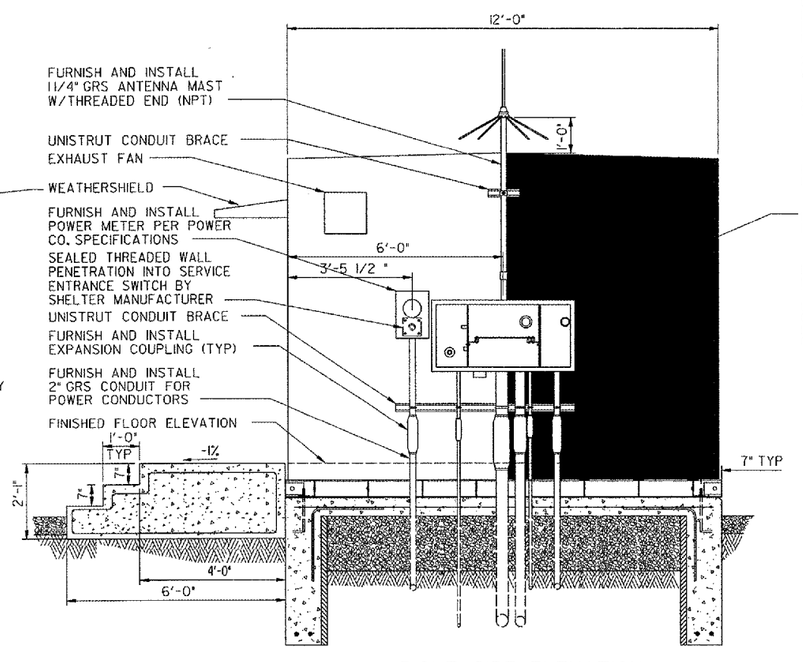

RIGHT SIDE ELEVATION

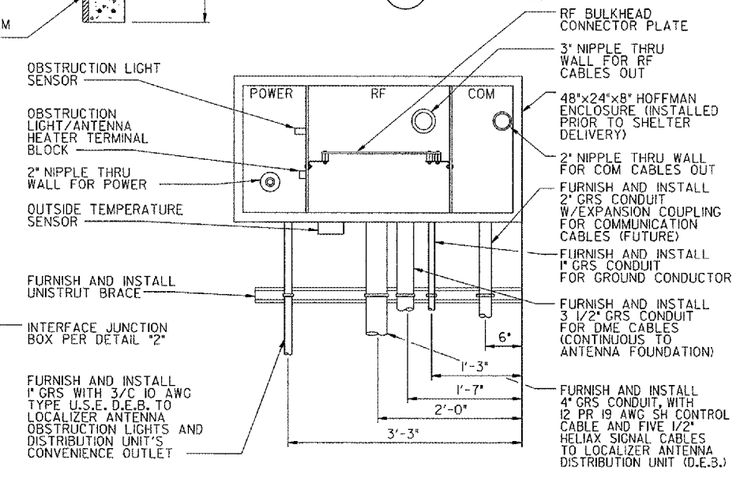

INTERFACE JUNCTION BOX

2 DETAIL

SCALE IN FEET

CONTRACTOR SHALL SUBMIT REQUESTS FOR SUBSTITUTION OF SPECIFIC MANUFACTURER'S ITEMS SHOWN PER PARAGRAPH 1 OF THE SPECIAL SPECIFICATIONS.

REV	DATE	DESCRIPTION	JCN	REDLINE DATE	APVD

SHEET 56 OF 67

DEPARTMENT OF TRANSPORTATION
FEDERAL AVIATION ADMINISTRATION
GREAT LAKES REGION — CHICAGO, ILLINOIS

LOCALIZER

EXTERIOR ELEVATIONS AND FOUNDATION
12' X 16' PRE-FABRICATED EQUIPMENT SHELTER

AURORA — AURORA MUNICIPAL AIRPORT — IL

REVIEWED BY | SUBMITTED BY | APPROVED BY

PROJ ENGR, TIMOTHY DYER | PLATFORM MGR. CLELAND MICHEEL

DESIGNED TAD | DRAWN TAD | CHECKED EGS

ISSUED BY CHICAGO NAS IMPLEMENTATION CENTER

DATE 02/27/2006 | JCN

DRAWING NO ARR-D-LOC33-A01 | REV

SHEET OF

THIS DRAWING PRODUCED ON THE GREAT LAKES REGION MICROSTATION SYSTEM

K:\Aurora\042BS04\Draw\Sheets\FAA ILS DGPS, DME mod. 5-10-05\ARR-D-LOC33-A01.dgn 5/10/2006 5:14:29 PM BYNKES