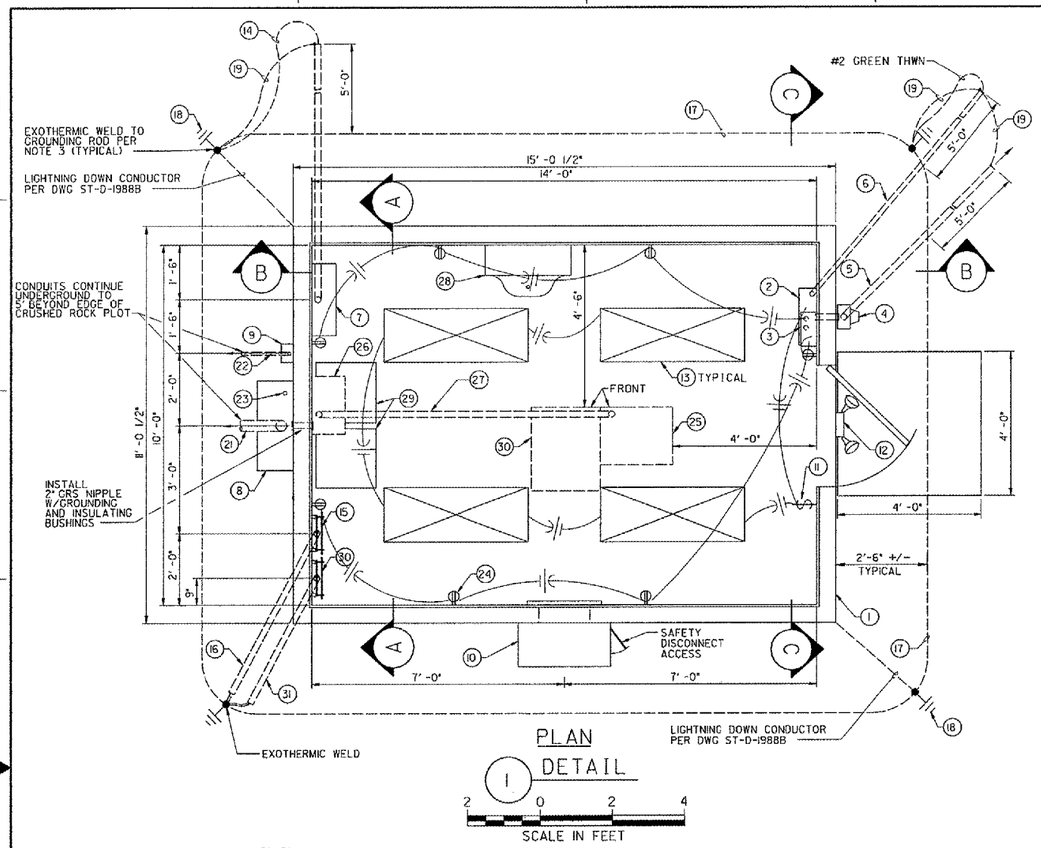

PLAN DETAIL (1)

SCALE IN FEET

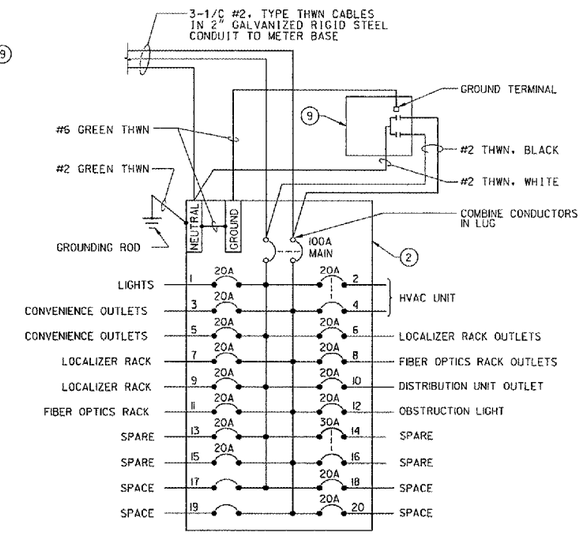

POWER PANEL WIRING DETAIL (2)

NOT TO SCALE

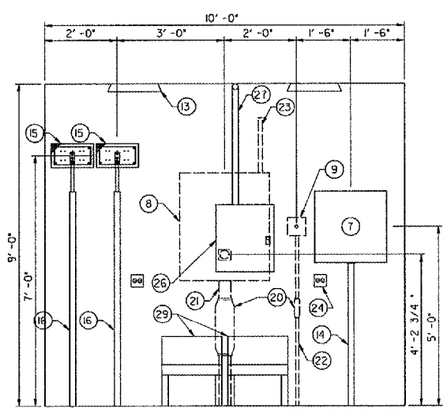

REAR WALL INTERIOR ELEVATION SECTION (A)

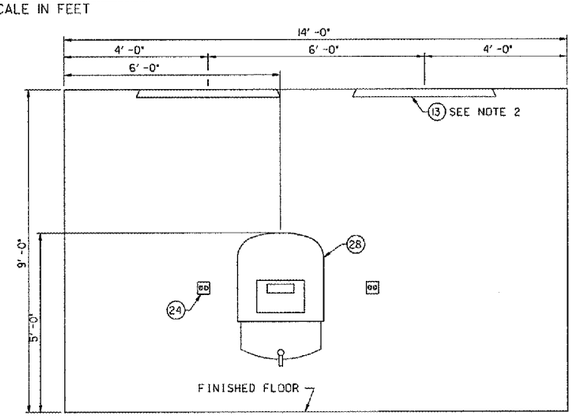

RIGHT WALL INTERIOR ELEVATION SECTION (B)

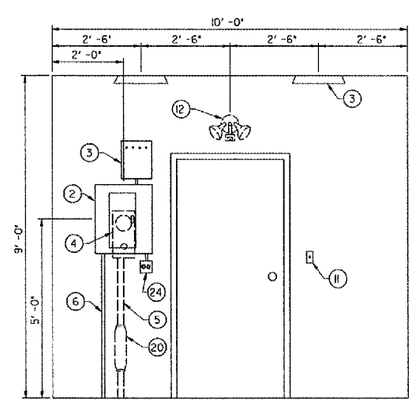

FRONT WALL INTERIOR ELEVATION SECTION (C)

NUMBERED LEGEND:

(F&I = FURNISH & INSTALL. I = INSTALL. BO = INSTALLED BY FAA INSTALLATION PERSONNEL

F&I (1) REINFORCED CONCRETE FOUNDATION AND WOOD FRAME EQUIPMENT SHELTER PER DWG ARR-D-LOC09-A01.

F&I (2) POWER PANEL, SQUARE 'D' CAT NO NQOD20M100CU IN NEMA 1ENCLOSURE WITH BOLT-ON BREAKERS. SEE DETAIL '2' FOR BREAKER ASSIGNMENTS.

F&I (3) AC SURGE ARRESTER, LIGHTING PROTECTION CORP. CAT. NO. LPC 20206-TAC.

F&I (4) ELECTRIC POWER METER. SEE SITE PLAN FOR POWER PROVISION DETAILS.

F&I (5) 3-1/C #2 TYPE U.S.E. POWER CABLES IN 2" GALVANIZED RIGID STEEL CONDUIT. SEE SITE PLAN FOR POWER SOURCE LOCATION AND POWER PROVISION DETAILS.

F&I (6) 1" GRS CONDUIT WITH #2 THWN GROUNDING CONDUCTORS FROM DISTRIBUTION PANEL TO GROUNDING ROD.

F&I (7) 24" X 24" X 8" CONTROL CABLE JUNCTION BOX, NEMA 1, HOFFMAN A24N24BLP WITH PANEL, HOFFMAN A-24N24MP MEETS SPECIFICATIONS.

F&I (8) 36" x 30" x 12" RF JUNCTION BOX, NEMA 3R, HOFFMAN A36R3012HCR WITH PANEL, HOFFMAN A36P30 MEETS SPECIFICATIONS.

F&I (9) 6" X 6" X 4" POWER JUNCTION BOX, NEMA 3R, HOFFMAN A6R64HCR WITH PANEL, HOFFMAN A-6N6P MEETS SPECIFICATIONS.

F&I (10) HVAC THRU-WALL UNIT, 11,100 BTU A/C, 3.6 KW HEAT. BARD CAT. NO. WA12I-A03EX4XXJ MEETS SPECIFICATIONS. PROVIDE SHOP DRAWINGS FOR SUBSTITUTIONS.

F&I (11) LIGHT SWITCH PER NOTE 1.

F&I (12) SECURITY FLOODLIGHT WITH DIE-CAST METAL LAMP COVERS, 75 W, 120V PAR-38 INCANDESCENT LAMPS (2), PHOTO AND MOTION CONTROLLED, ADJUSTABLE TIME AND SENSITIVITY SETTINGS. REGENT MODEL #SV275RW (WHITE FINISH) BY COOPER LIGHTING PRODUCTS MEETS SPECIFICATIONS.

F&I (13) 4'-LONG 2-LAMP-TUBE FLUORESCENT LIGHT FIXTURE, SURFACE-MOUNTED, 120-VOLT, WITH WRAPAROUND ACRYLIC LENS ENCLOSURE AND TWO 48"-LONG, 32-WATT, T-8 FLUORESCENT LAMP TUBES, TYPE F32. HOLOPHANE MODEL NO. HW-S-M-4-D-S-H71-042-LP-I-I-RIFI MEETS SPECIFICATIONS.

F&I (14) #2/0 GROUNDING CONDUCTOR, GREEN THWN WITH RED STRIPE IN 2" GRS CONDUIT THROUGH FLOOR. CONNECT TO GROUNDING COUNTERPOISE AT GROUNDING ROD USING AN EXOTHERMIC WELD. LEAVE 3' LENGTH OF CONDUCTOR IN CONTROL CABLE JUNCTION BOX FOR TERMINATION BY OTHERS.

F&I (15) COPPER GROUNDING PLATE WITH PLASTIC COVER PER DWG ARR-D-LOC09-E01. COVER SHALL BE LABELLED 'CAUTION: MAIN ELECTRONIC GROUNDING PLATE'.

F&I (16) 2" PVC CONDUIT WITH TWO #4/0 THWN GROUNDING CONDUCTORS FROM MAIN GROUNDING PLATE. SEE NOTE 3.

F&I (17) #4/0 BARE COPPER COUNTERPOISE 2'-6" BELOW GRADE. SEE NOTE 3.

F&I (18) 3/4" X 10' COPPERCLAD GROUNDING ROD.

F&I (19) #6 BARE COPPER GROUNDING CONDUCTOR.

F&I (20) EXPANSION COUPLING, 4" MIN TRAVEL. APPLETON EXPANSION COUPLINGS MEET SPECIFICATIONS

F&I (21) 4" GRS CONDUIT TO 5' BEYOND EDGE OF CRUSHED ROCK PLOT WITH FOUR 5/8" HELIAX SIGNAL CABLES AND 12 PR #19 SH CONTROL CABLES DIRECT BURY TO LOCALIZER.

F&I (22) 1" GRS CONDUIT TO 5' BEYOND EDGE OF CRUSHED ROCK PLOT WITH POWER CONDUCTORS FOR OBSTRUCTION LIGHT AND DISTRIBUTION UNIT OUTLET DIRECT BURY TO LOCALIZER.

F&I (23) 1 1/4" GALVANIZED RIGID STEEL CONDUIT FOR FLIGHT CHECK ANTENNA. CONDUIT SHALL EXTEND TO 12" ABOVE ROOF PEAK. SECURE CONDUIT TO SHELTER USING 2-HOLE STRAPS.

F&I (24) DUPLEX RECEPTACLE PER NOTE 1.

BO (25) LOCALIZER ELECTRONIC SUBSYSTEM RACK.

BO (26) LOCALIZER DISTRIBUTION UNIT AND COMBINING UNIT.

BO (27) 2" EMT CONDUIT.

BO (28) EYE WASH STATION.

BO (29) FLOOR-MOUNTED BATTERY BOXES (2 REQUIRED).

F&I (30) COPPER GROUNDING PLATE WITH PLASTIC COVER PER DWG ARR-D-LOC09-E01. COVER SHALL BE LABELLED 'CAUTION: HIGH ENERGY ELECTRONIC GROUNDING PLATE'.

F&I (31) 2" PVC CONDUIT WITH 4/0 AWG GREEN WITH RED STRIPE GROUNDING CONDUCTOR FROM HIGH ENERGY GROUNDING PLATE.

NOTES:

1. LIGHT FIXTURES, POWER PANEL, SURGE ARRESTER, RECEPTACLES, AND LIGHT SWITCHES SHALL BE SURFACE MOUNTED. CONDUIT RUNS SHALL BE INSTALLED PLUMB OR HORIZONTAL WITH MINIMUM NUMBER OF BENDS.
2. EXTERIOR WALL PENETRATIONS SHALL BE SEALED WITH WATERPROOF SILICONE CAULK.
3. ALL GROUNDING CONDUCTOR CONNECTIONS TO COUNTERPOISE SHALL BE ATTACHED TO GROUNDING RODS USING EXOTHERMIC WELDS PER SPECIFICATIONS.

CONTRACTOR SHALL SUBMIT REQUESTS FOR SUBSTITUTION OF SPECIFIC MANUFACTURER'S ITEMS SHOWN PER PARAGRAPH 1 OF THE SPECIAL SPECIFICATIONS.

REV	DATE	DESCRIPTION	JCN	REDLINE DATE	APVD

SHEET 66 OF 67

DEPARTMENT OF TRANSPORTATION
FEDERAL AVIATION ADMINISTRATION
GREAT LAKES REGION — CHICAGO, ILLINOIS

LOCALIZER
10' X 14' EQUIPMENT SHELTER
FLOOR PLAN AND INTERIOR ELEVATIONS
RUNWAY 9

AURORA — AURORA MUNICIPAL AIRPORT — IL

REVIEWED BY | SUBMITTED BY | APPROVED BY

PROJ ENGR, *TIMOTHY DYER* | PLATFORM MGR, *CLELAND MICHEEL*

DESIGNED TAD | DRAWN TAD | CHECKED EGS

ISSUED BY CHICAGO NAS IMPLEMENTATION CENTER

DATE 05/03/2006 | JCN | DRAWING NO ARR-D-LOC09-A02 | REV | SHEET OF

THIS DRAWING PRODUCED ON THE GREAT LAKES REGION MICROSTATION SYSTEM

K:\Aurora\ap\0428504\Draw\Sheets\FAA ILS DGNs, CMT mod. 5-10-06\ARR-D-LOC09-A02.dgn
5/10/2006 8:11:35 PM BNAMES
AMPSW