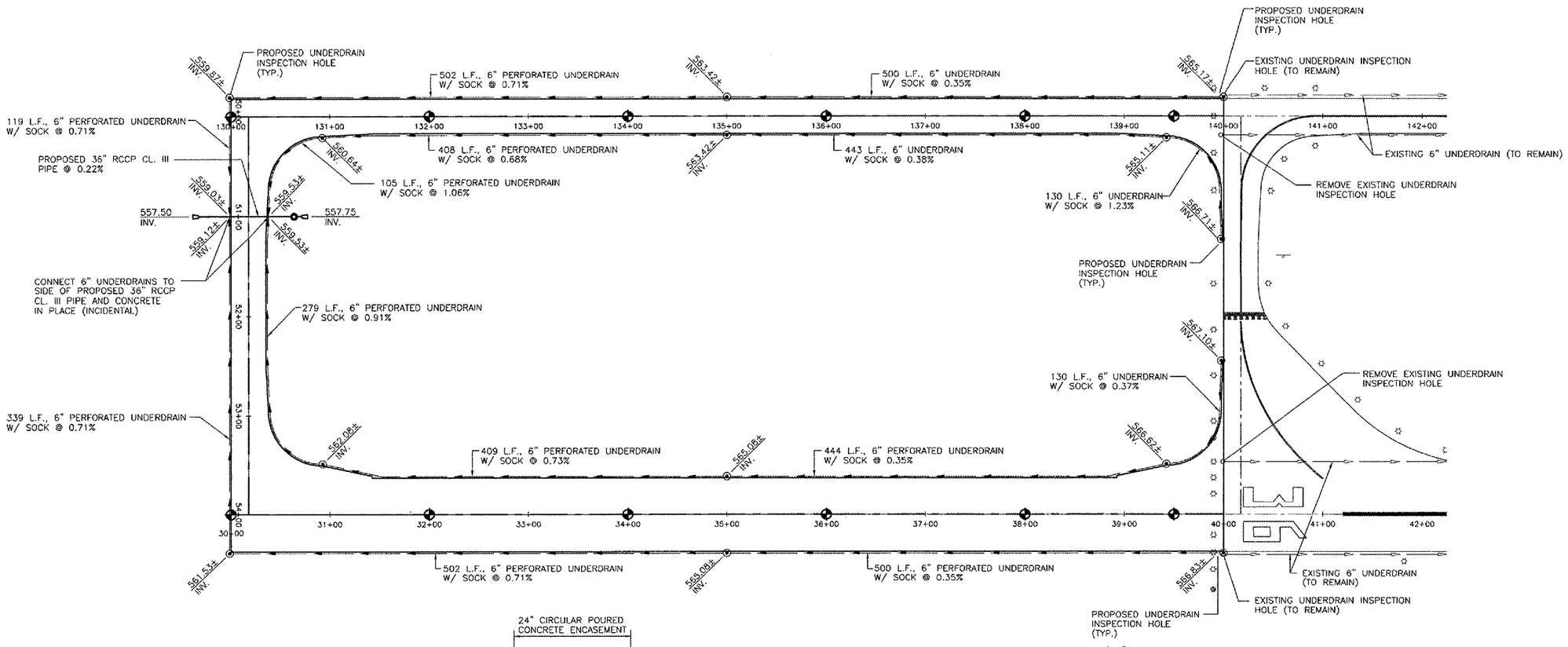

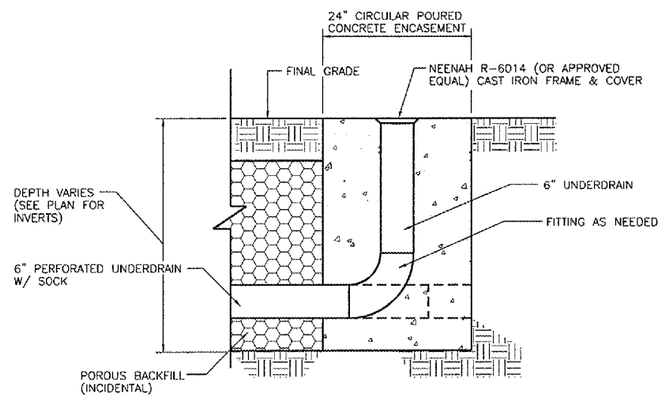

UNDERDRAIN INSPECTION HOLE DETAIL

N.T.S.

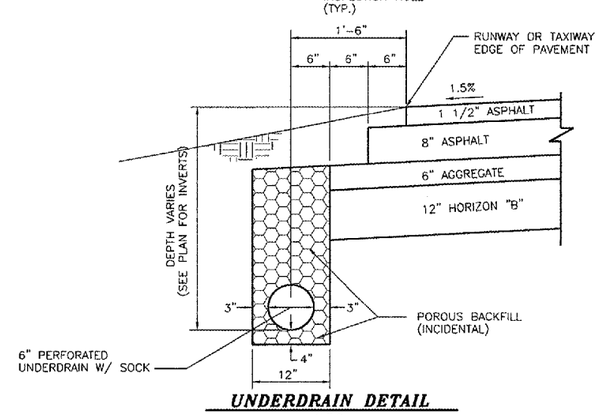

UNDERDRAIN DETAIL

N.T.S.

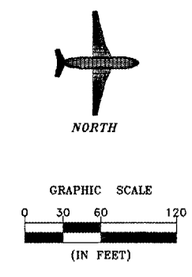

DRAWN BY: JMT	CAD/.DWG: UNDERDRAIN XREF/.DWG:	REVISIONS DATE	BY	CHAMLIN & ASSOCIATES	PERU MORRIS ILLINOIS	MORRIS MUNICIPAL AIRPORT MORRIS, ILLINOIS	UNDERDRAIN PLAN	SCALE: AS NOTED	SHEET 6
CHECKED BY: KWH	DATE: 5/06							FILE NO.: 1002.58Y-1	OF 21