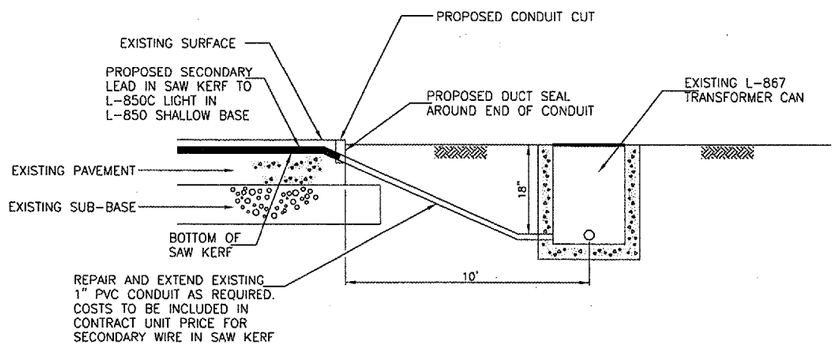

PROPOSED SECONDARY WIRING DETAIL FOR
L-850C LIGHT IN L-850 SHALLOW BASE
STA. 53+02, LT. 85'

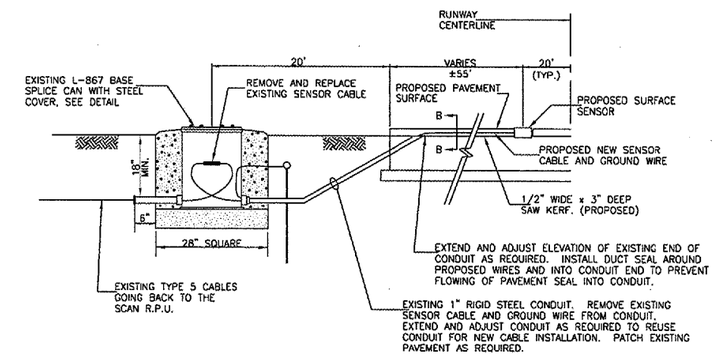

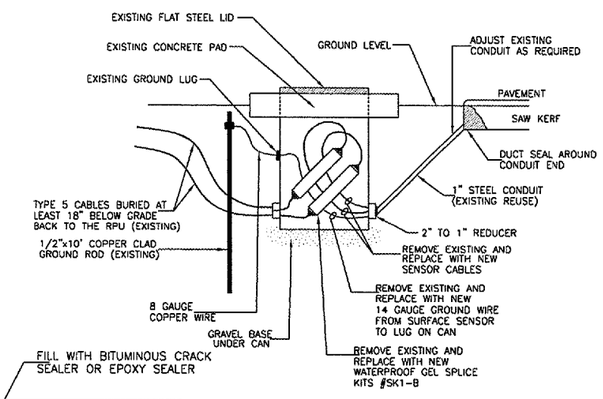

SPLICE CAN DETAILS

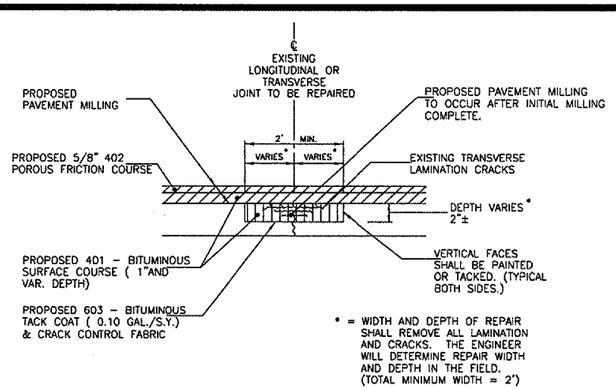

TYPICAL DETAIL - LONGITUDINAL OR TRANSVERSE
JOINT REPAIR

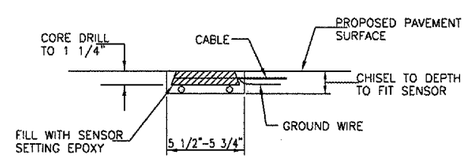

SECTION A-A

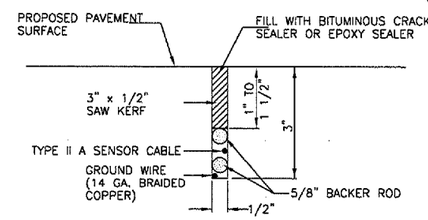

SECTION B-B

TYPICAL SENSOR HEAD AND
CABLE INSTALLATION DETAIL

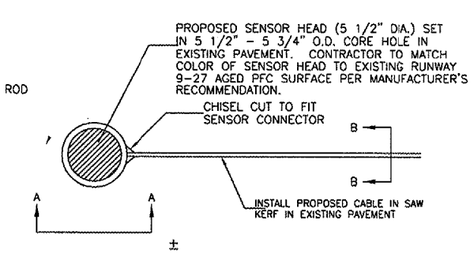

PROPOSED SENSOR HEAD AND CABLE INSTALLATION
DETAILS - PLAN VIEW, STA. 22+00 RIGHT