ITEM NO. 01A IDOT LETTING: AUGUST 4, 2017

SD058
TOTAL SHEETS = 43

CONSTRUCTION PLANS - ISSUED JUNE 9, 2017

TAXIWAY B RELOCATION, PHASE 1: FILLET IMPROVEMENTS

BI-STATE DEVELOPMENT AGENCY
ST. LOUIS DOWNTOWN AIRPORT (CPS)
CAHOKIA, ST. CLAIR COUNTY, ILLINOIS

IDA PROJECT NO.: CPS-4505
SBG PROJECT NO.: 3-17-SBGP-133/134

VICINITY MAP

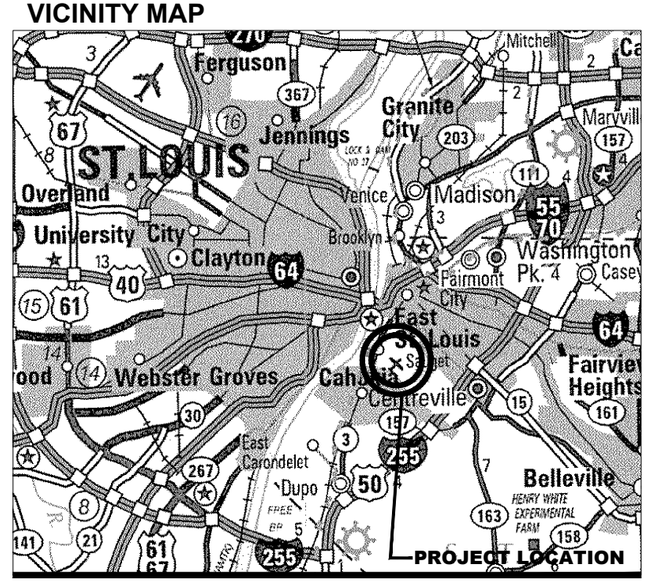

LOCATION MAP

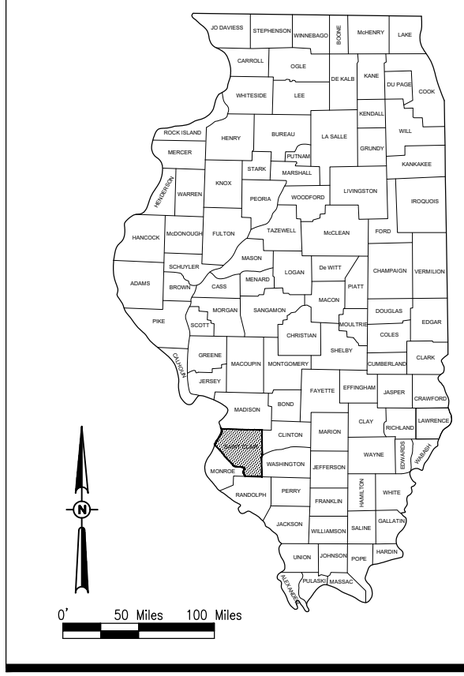

SCOPE OF WORK:

THIS PROJECT SHALL CONSIST OF THE CONSTRUCTION OF PAVEMENT WIDENING ADJACENT TO EXISTING TAXIWAY PAVEMENT AT MULTIPLE LOCATIONS ON THE AIRFIELD. THE PROJECT INCLUDES UNCLASSIFIED EXCAVATION, REMOVAL/RELOCATION/REPLACEMENT OF AIRFIELD LIGHTING AND SIGNAGE, EARTHWORK GRADING AND DRAINAGE, PAVEMENT PLACEMENT, PAVEMENT MARKING, EROSION CONTROL ITEMS AND INCIDENTALS.

NOTICE TO CONTRACTORS AND BIDDERS

THESE CONSTRUCTION PLANS RELY UPON THE SPECIAL PROVISIONS AND THE SPECIFICATIONS TO PROVIDE FOR A COMPLETE DESCRIPTION OF THE WORK AND CONSTRUCTION REQUIREMENTS. THE PLANS SHALL ONLY BE USED IN COMBINATION WITH ALL CONTRACT DOCUMENTS.

No.	Issue/Description	Sheets Changed	Date	By

COVERING
ELECTRICAL
DESIGN

LICENSED PROFESSIONAL ENGINEER
KEVIN N. LIGHTFOOT
062-047643
STATE OF ILLINOIS
EXPIRES 11/30/2017

Kevin N. Lightfoot, P.E.
Electrical Engineer
6/6/2017
Date

HANSON

HANSON PROFESSIONAL SERVICES INC.
1525 South Sixth Street
Springfield, Illinois 62703-2886
Telephone: 217.788.2450
Fax: 217.788.2503

STATE OF ILLINOIS
BARRY S. STOLZ
062-057281
LICENSED PROFESSIONAL ENGINEER
EXP 11/30/17

Barry S. Stolz, P.E.
Civil Engineer
6/9/17
Date

ST. LOUIS DOWNTOWN AIRPORT

Bi-State Development Agency
6100 Archview Drive
Cahokia, Illinois 62206-1445
Telephone: 618.337.6060

Erick A. Dahl
Airport Director
6/7/17
Date

JUN 09, 2017 1:03 PM HERND01562
I:\16JOBS\16A0107\16A0107D\CAD\AIRPORT\SHEET\G-001-CVR.DWG

SUMMARY OF QUANTITIES - BASE BID

ITEM NO.	DESCRIPTION	TOTAL QUANTITY	UNIT	AS-BUILT QUANTITY
AR108108	1/C #8 5 KV UG CABLE	460	L.F.	
AR108158	1/C #8 5 KV UG CABLE IN UD	4,760	L.F.	
AR110013	3" DIRECTIONAL BORE	340	L.F.	
AR110551	EXTEND DUCT	56	L.F.	
AR115966	RELOCATE ELECTRICAL HANDHOLE	2	EA.	
AR125410	MITL-STAKE MOUNTED	2	EA.	
AR125415	MITL-BASE MOUNTED	4	EA.	
AR125565	SPLICE CAN	6	EA.	
AR125906	REMOVE SPLICE CAN	3	EA.	
AR125961	RELOCATE STAKE MOUNTED LIGHT	11	EA.	
AR125962	RELOCATE BASE MOUNTED LIGHT	27	EA.	
AR125964	RELOCATE TAXI GUIDANCE SIGN	8	EA.	
AR150510	ENGINEER'S FIELD OFFICE	1	L.S.	
AR150520	MOBILIZATION	1	L.S.	
AR150540	HAUL ROUTE	1	L.S.	
AR152410	UNCLASSIFIED EXCAVATION	2,613	C.Y.	
AR152540	SOIL STABILIZATION FABRIC	865	S.Y.	
AR156531	EROSION CONTROL BLANKET	230	S.Y.	
AR208540	OVERSIZE AGGREGATE	2,339	TON	
AR209510	CRUSHED AGGREGATE BASE COURSE	2,188	TON	
AR401613	BIT. SURF. CSE.-METHOD I, SUPERPAVE	752	TON	
AR403614	BIT. BASE CSE.-METHOD II, SUPERPAVE	971	TON	
AR602510	BITUMINOUS PRIME COAT	1,221	GAL.	
AR603510	BITUMINOUS TACK COAT	1,005	GAL.	
AR620520	PAVEMENT MARKING-WATERBORNE	108	S.F.	
AR620525	PAVEMENT MARKING-BLACK BORDER	182	S.F.	
AR620900	PAVEMENT MARKING REMOVAL	866	S.F.	
AR701624	24" RCP, CLASS V	40	L.F.	
AR701900	REMOVE PIPE	36	L.F.	
AR752424	PRECAST REINFORCED CONC. FES 24"	1	EA.	
AR752900	REMOVE END SECTION	1	EA.	
AR901510	SEEDING	0.98	ACRE	
AR901520	TEMPORARY SEEDING	0.98	ACRE	
AR908510	MULCHING	0.93	ACRE	

SUMMARY OF QUANTITIES - ADDITIVE ALTERNATE BID

ITEM NO.	DESCRIPTION	TOTAL QUANTITY	UNIT	AS-BUILT QUANTITY
AS108158	1/C #8 5 KV UG CABLE IN UD	3,070	L.F.	
AS110013	3" DIRECTIONAL BORE	290	L.F.	
AS125410	MITL-STAKE MOUNTED	3	EA.	
AS125415	MITL-BASE MOUNTED	1	EA.	
AS125565	SPLICE CAN	6	EA.	
AS125904	REMOVE TAXI GUIDANCE SIGN	1	EA.	
AS125906	REMOVE SPLICE CAN	1	EA.	
AS125961	RELOCATE STAKE MOUNTED LIGHT	13	EA.	
AS125962	RELOCATE BASE MOUNTED LIGHT	1	EA.	
AS125964	RELOCATE TAXI GUIDANCE SIGN	3	EA.	
AS152410	UNCLASSIFIED EXCAVATION	1,395	C.Y.	
AS208540	OVERSIZE AGGREGATE	608	TON	
AS209510	CRUSHED AGGREGATE BASE COURSE	914	TON	
AS401613	BIT. SURF. CSE.-METHOD I, SUPERPAVE	307	TON	
AS403614	BIT. BASE CSE.-METHOD II, SUPERPAVE	400	TON	
AS602510	BITUMINOUS PRIME COAT	507	GAL.	
AS603510	BITUMINOUS TACK COAT	413	GAL.	
AS620900	PAVEMENT MARKING REMOVAL	798	S.F.	
AS901510	SEEDING	1.03	ACRE	
AS901520	TEMPORARY SEEDING	1.03	ACRE	
AS908510	MULCHING	1.03	ACRE	

INDEX TO SHEETS

EARTHWORK QUANTITY SUMMARY
BASE BID ONLY

WORK AREA	CUT (CY)	FILL (CY)	FILL + 20% (CY)	NET (CY)
1	855	70	84	771 (EXCESS)
2	1,142	89	107	1,035 (EXCESS)
3	616	215	258	358 (EXCESS)
TOTAL	2,613**	374	449	2,164 (EXCESS)

** USED TO CALCULATE AR152410 PAY ITEM QUANTITY FOR BASE BID

EARTHWORK QUANTITY SUMMARY
BASE BID + ADDITIVE ALTERNATE 1

WORK AREA	CUT (CY)	FILL (CY)	FILL + 20% (CY)	NET (CY)
1	855	70	84	771 (EXCESS)
2	1,142	89	107	1,035 (EXCESS)
3	616	215	258	358 (EXCESS)
4	1,395**	88	106	1,289 (EXCESS)
TOTAL	4,008	462	555	3,453 (EXCESS)

** USED TO CALCULATE AS152410 PAY ITEM QUANTITY FOR ADD. ALT. 1

NOTE: EARTHWORK QUANTITIES (CUT/FILL VOLUMES) WERE CALCULATED UTILIZING AUTODESK CIVIL3D 2017 SOFTWARE THROUGH AUTOCAD. THE CALCULATION METHOD WAS BY A COMPARISON OF SURFACE MODELS CREATED WITH EXISTING SURVEY DATA AND PROPOSED DESIGN GRADES. THE VOLUMES WERE CALCULATED IN TWO PARTS: THE CUT VOLUME REQUIRED TO CORE OUT FOR THE PROPOSED PAVEMENT SECTION AS COMPARED TO THE EXISTING GROUND SURFACE, AND THE CUT/FILL VOLUMES REQUIRED FOR PROPOSED GRADING WORK OUTSIDE OF THE PROPOSED PAVEMENT LIMITS AS COMPARED TO THE EXISTING GROUND SURFACE. THE NUMBERS IN THE SUMMARY TABLES ABOVE REPRESENT A TOTAL OF THESE TWO PARTS ADDED TOGETHER FOR CLARITY.

GENERAL NOTES:

QUANTITIES
PAYMENT WILL BE MADE UNDER THE ITEM NUMBERS, DESCRIPTIONS AND UNITS NOTED IN THE ABOVE TABLE IN ACCORDANCE WITH THE BASIS OF PAYMENT FOR EACH RESPECTIVE WORK ITEM COMPLETED AND ACCEPTED BY THE ENGINEER.

CERITIFIED PAYROLLS
THE RESIDENT ENGINEER/TECHNICIAN CANNOT FORWARD CONSTRUCTION REPORTS TO THE ILLINOIS DIVISION OF AERONAUTICS FOR PROCESSING UNTIL ALL CERTIFIED PAYROLLS FOR THE PERIOD HAVE BEEN RECEIVED.

MATERIAL CERTIFICATIONS
MATERIALS TO BE INCORPORATED INTO THE PROJECT CANNOT BE USED WITHOUT PRIOR APPROVAL. ALL MATERIALS TO BE USED IN THE PROJECT MUST BE SUBMITTED TO THE RESIDENT ENGINEER FOR APPROVAL. USE OF MATERIALS WITHOUT PRIOR APPROVAL AND ULTIMATELY DETERMINED TO BE UNACCEPTABLE BY THE ILLINOIS DIVISION OF AERONAUTICS ARE SUBJECT TO REMOVAL AND/OR NON-PAYMENT.

HANSON
Engineering | Planning | Allied Services
Offices Nationwide
www.hanson-inc.com

Hanson Professional Services Inc.
1525 S. 6th Street
Springfield, IL 62703
phone: 217-788-2450
fax: 217-788-2503

Illinois Licensed
Professional Service Corporation
#184-001084

ST. LOUIS DOWNTOWN AIRPORT
Bi-State Development Agency
6100 Archview Drive
Cahokia, IL 62206-1445

EXP 11/30/17
STATE OF ILLINOIS
BARRY S. STOLZ
062-057281
LICENSED PROFESSIONAL ENGINEER
6/9/17

TAXIWAY B RELOCATION, PHASE 1:
FILLET IMPROVEMENTS

SBG No:
3-17-SBGP-133/134
IDA No: CPS-4505

Contract No. SD058

NO.	DATE	DESCRIPTION		
		DES	DWN	REV

ISSUE: JUNE 9, 2017
PROJECT NO: 16A0107
CAD FILE: G-002-FLP.DWG
DESIGN BY: JRH 01/12/2017
DRAWN BY: JRH 01/12/2017
REVIEWED BY: BSS 06/06/17

SHEET TITLE

SUMMARY OF QUANTITIES AND INDEX TO SHEETS

LEGEND

- EXISTING IMPROVEMENTS
- EXISTING BUILDINGS
- PROPOSED IMPROVEMENTS
- PROPOSED CONTRACTOR STAGING AREA
- PROPOSED STOCKPILile
- EXISTING FENCE
- SURVEY CONTROL POINT

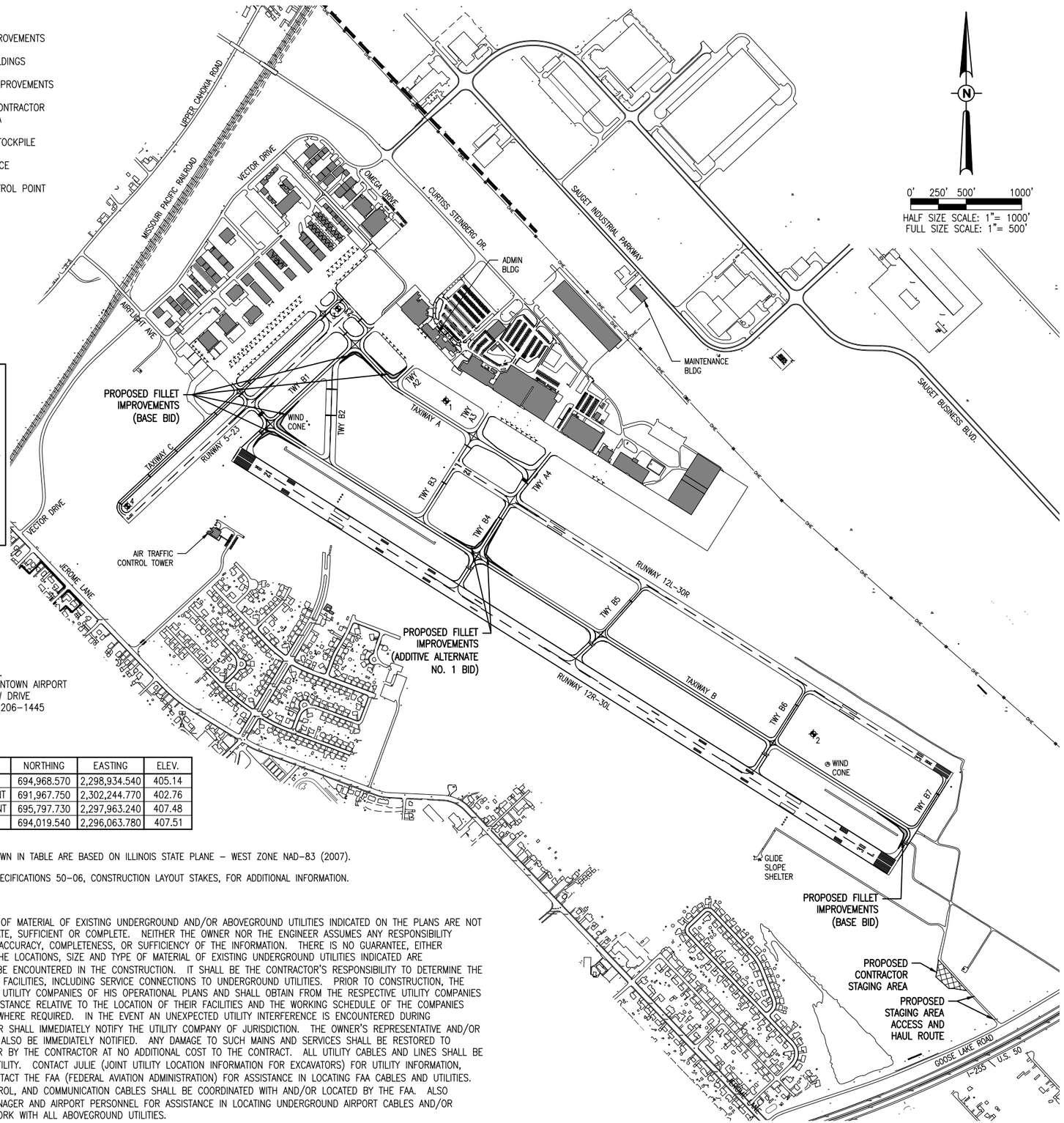

NOTE:
THE CONSTRUCTION OF THE TWY A2 AND TWY B7 FILLETS REQUIRES THE PLACEMENT OF 385 CUBIC YARDS OF FILL IN THE EXISTING FLOODPLAIN, AS RECOGNIZED BY THE FEDERAL EMERGENCY MANAGEMENT AGENCY (FEMA), FLOOD INSURANCE RATE MAP (FIRM). THE MITIGATION OF THIS FLOODPLAIN SHALL BE ACCOMPLISHED BY OTHERS (AIRPORT) OUTSIDE OF THIS CONTRACT.

J.U.L.I.E. INFORMATION

COUNTY_____ST. CLAIR
CITY_____CAHOKIA
TOWNSHIP_____CENTERVILLE
SECTION NO._____T.1N. – R.10W.
ADDRESS_____ST. LOUIS DOWNTOWN AIRPORT
6100 ARCHVIEW DRIVE
CAHOKIA, IL 62206–1445

CONTROL POINT DATA

NO.	DESCRIPTION	NORTHING	EASTING	ELEV.
1	ALUM CAP IN CONC.	694,968.570	2,298,934.540	405.14
2	CPS A, NGS MONUMENT	691,967.750	2,302,244.770	402.76
3	CPS C, NGS MONUMENT	695,797.730	2,297,963.240	407.48
4	ALUM CAP	694,019.540	2,296,063.780	407.51

SURVEY NOTES

1. ALL COORDINATE VALUES SHOWN IN TABLE ARE BASED ON ILLINOIS STATE PLANE – WEST ZONE NAD–83 (2007).
2. REFER TO IDOT STANDARD SPECIFICATIONS 50–06, CONSTRUCTION LAYOUT STAKES, FOR ADDITIONAL INFORMATION.

UTILITY NOTE

THE LOCATION, SIZE, AND TYPE OF MATERIAL OF EXISTING UNDERGROUND AND/OR ABOVEGROUND UTILITIES INDICATED ON THE PLANS ARE NOT REPRESENTED AS BEING ACCURATE, SUFFICIENT OR COMPLETE. NEITHER THE OWNER NOR THE ENGINEER ASSUMES ANY RESPONSIBILITY WHATEVER IN RESPECT TO THE ACCURACY, COMPLETENESS, OR SUFFICIENCY OF THE INFORMATION. THERE IS NO GUARANTEE, EITHER EXPRESSED OR IMPLIED, THAT THE LOCATIONS, SIZE AND TYPE OF MATERIAL OF EXISTING UNDERGROUND UTILITIES INDICATED ARE REPRESENTATIVE OF THOSE TO BE ENCOUNTERED IN THE CONSTRUCTION. IT SHALL BE THE CONTRACTOR'S RESPONSIBILITY TO DETERMINE THE ACTUAL LOCATION OF ALL SUCH FACILITIES, INCLUDING SERVICE CONNECTIONS TO UNDERGROUND UTILITIES. PRIOR TO CONSTRUCTION, THE CONTRACTOR SHALL NOTIFY THE UTILITY COMPANIES OF HIS OPERATIONAL PLANS AND SHALL OBTAIN FROM THE RESPECTIVE UTILITY COMPANIES DETAILED INFORMATION AND ASSISTANCE RELATIVE TO THE LOCATION OF THEIR FACILITIES AND THE WORKING SCHEDULE OF THE COMPANIES FOR REMOVAL OR ADJUSTMENT WHERE REQUIRED. IN THE EVENT AN UNEXPECTED UTILITY INTERFERENCE IS ENCOUNTERED DURING CONSTRUCTION, THE CONTRACTOR SHALL IMMEDIATELY NOTIFY THE UTILITY COMPANY OF JURISDICTION. THE OWNER'S REPRESENTATIVE AND/OR THE RESIDENT ENGINEER SHALL ALSO BE IMMEDIATELY NOTIFIED. ANY DAMAGE TO SUCH MAINS AND SERVICES SHALL BE RESTORED TO SERVICE AT ONCE AND PAID FOR BY THE CONTRACTOR AT NO ADDITIONAL COST TO THE CONTRACT. ALL UTILITY CABLES AND LINES SHALL BE LOCATED BY THE RESPECTIVE UTILITY. CONTACT JULIE (JOINT UTILITY LOCATION INFORMATION FOR EXCAVATORS) FOR UTILITY INFORMATION, PHONE: 1–800–892–0123. CONTACT THE FAA (FEDERAL AVIATION ADMINISTRATION) FOR ASSISTANCE IN LOCATING FAA CABLES AND UTILITIES. LOCATION OF FAA POWER, CONTROL, AND COMMUNICATION CABLES SHALL BE COORDINATED WITH AND/OR LOCATED BY THE FAA. ALSO CONTACT AIRPORT DIRECTOR/MANAGER AND AIRPORT PERSONNEL FOR ASSISTANCE IN LOCATING UNDERGROUND AIRPORT CABLES AND/OR UTILITIES. ALSO COORDINATE WORK WITH ALL ABOVEGROUND UTILITIES.

GENERAL NOTES

1. THE SCOPE OF WORK SHEET IS INTENDED ONLY AS A GENERAL DESCRIPTION OF WORK ITEMS AND THEIR APPROXIMATE LOCATIONS AND LIMITS, FOR THE PURPOSE OF UNDERSTANDING THE SCOPE OF THE PROJECT. THIS SHEET SHALL NOT BE USED AS A CONSTRUCTION PLAN. REFER TO THE FOLLOWING PLAN SHEETS FOR DETAILED CONSTRUCTION REQUIREMENTS, LOCATIONS, AND ITEMS OF WORK.
2. WORK FOR THIS PROJECT SHALL CONSIST OF, BUT IS NOT LIMITED TO, CONSTRUCTION OF PAVEMENT WIDENING ADJACENT TO EXISTING TAXIWAY PAVEMENT AT MULTIPLE LOCATIONS ON THE AIRFIELD, INCLUDING UNCLASSIFIED EXCAVATION, REMOVAL/RELOCATION/REPLACEMENT OF AIRFIELD LIGHTING AND SIGNAGE, EARTHWORK GRADING AND DRAINAGE, PAVEMENT PLACEMENT, PAVEMENT MARKING, EROSION CONTROL ITEMS AND INCIDENTALS.
3. THE CONTRACTOR SHALL FURNISH ALL LABOR, MATERIAL, EQUIPMENT, AND TRANSPORTATION NECESSARY TO CONSTRUCT ALL ELEMENTS OF THE PROJECT AS DESCRIBED IN THE CONSTRUCTION PLANS AND SPECIFICATIONS. THE PROJECT PAY ITEMS ARE INTENDED TO BE INCLUSIVE OF ALL WORK TO BE PERFORMED AS SHOWN IN THESE PLANS. ALL INCIDENTAL WORK REQUIRED TO COMPLETE THE PROJECT TO THE SATISFACTION OF THE RESIDENT ENGINEER/ TECHNICIAN IS TO BE INCLUDED IN THE COSTS OF PERFORMING THESE ITEMS.
4. THE RULES, REGULATIONS, AND SPECIFICATIONS ENUMERATED HEREIN SHALL BE CONSIDERED AS MINIMUM REQUIREMENTS. THEY SHALL NOT PROHIBIT THE CONTRACTOR FROM FURNISHING AND INSTALLING HIGHER GRADES OF MATERIAL THAN ARE SPECIFIED HEREIN.
5. THE CONTRACTOR IS NOT PERMITTED TO USE THE AIRPORT ENTRANCE DRIVE AND AUTO PARKING LOT FOR MATERIAL AND EQUIPMENT HAULING OR STORAGE. THE CONSTRUCTION ENTRANCE AS SHOWN ON THE SCOPE OF WORK AND/OR SAFETY PHASING PLAN ARE ONLY TO BE USED FOR THE PROJECT. ACCESS TO THE PROJECT FOR ALL HAULING OF MATERIALS AND EQUIPMENT SHALL BE RESTRICTED TO THE DESIGNATED CONSTRUCTION ENTRANCE.
6. IT SHALL BE THE RESPONSIBILITY OF THE CONTRACTOR TO PROTECT, PRESERVE AND REPAIR THE EXISTING AIRFIELD AND ROADWAY PAVEMENTS AT ALL TIMES. THE CONTRACTOR SHALL REPAIR ANY DAMAGE TO EXISTING ELECTRICAL, DRAINAGE, AND PAVEMENT STRUCTURES AT NO ADDITIONAL COST TO THE CONTRACT.
7. NO EQUIPMENT SHALL BE PERMITTED TO CROSS OR USE ANY EXISTING PAVEMENT OUTSIDE THE CONSTRUCTION LIMITS, GENERAL PROJECT AREA OR HAUL ROUTE.
8. CONTRACTOR IS REQUIRED TO PROVIDE THEIR OWN RESTROOM FACILITIES.
9. UNLESS OTHERWISE NOTED, ALL DISTURBED AREAS OUTSIDE OF THE PROPOSED CONSTRUCTION LIMITS SHALL BE GRADED, SEEDED AND/OR HYDROMULCH SEEDED AT NO ADDITIONAL COST TO THE CONTRACT.
10. ALL WASTE MATERIAL SHALL BE HAULED FROM THE AIRPORT AND PROPERLY DISPOSED OF UNLESS OTHERWISE SPECIFIED HEREIN.
11. THE CONTRACTOR SHALL BE RESPONSIBLE FOR OBTAINING PERMITS FOR HAULING ON PUBLIC ROADS, AS APPLICABLE. THE CONTRACTOR SHALL BE RESPONSIBLE FOR CORRECTING ANY DAMAGES TO ANY PAVEMENTS (PUBLIC OR PRIVATE) CAUSED BY HIS/HER CONSTRUCTION EQUIPMENT OR PERSONNEL.
12. THE OWNER SHALL HAVE THE RIGHT OF FIRST REFUSAL FOR ALL SALVAGEABLE MATERIAL REMOVED ON THE PROJECT.
13. THE CONTRACTOR SHALL COORDINATE WITH THE RESIDENT ENGINEEER/ TECHNICIAN SO THEY MAY DEVELOP ONE SET OF REDLINED AS–BUILT DRAWINGS AT THE COMPLETION OF THE PROJECT.
14. CONTRACTOR SHALL NOTE THAT ALL AREAS WITHIN THE AIRPORT PROPERTY LINE AND OUTSIDE THE CONSTRUCTION LIMITS MAY BE USED FOR AGRICULTURAL PURPOSES. THE CONSTRUCTION LIMITS SHALL BE RESTRICTED TO AREAS THAT ARE ABSOLUTELY NECESSARY TO DISTURB TO COMPLETE THE REQUIRED WORK ITEMS. LIMITS SHALL BE COORDINATED WITH THE RESIDENT ENGINEER PRIOR TO BEGINNING ANY WORK. ALL AREAS WHICH HAVE BEEN FARMED AND OR DESIGNATED TO BE FARMED AFTER THE PROJECT COMPLETION, AND HAVE BEEN DISTURBED BY CONSTRUCTION ACTIVITY, SHALL BE CHISEL PLOWED (36" MAX.) OR OTHERWISE SCARIFIED TO RETURN THE AREA TO A REASONABLE TILLABLE CONDITION (IF SO PERMITTED BY THE AIRPORT MANAGER.)
15. UNLESS OTHERWISE NOTED, CONTRACTOR SHALL RESTORE TO ORIGINAL CONDITION ALL GRASS, STONE, OR PAVEMENT DISTURBED BY CONTRACTOR'S CONSTRUCTION OPERATIONS, STAGING, AND CONSTRUCTION ACCESS ROUTES. DISTURBED AREAS TO BE REPAIRED, GRADED, AND MULCHED SEEDED UNLESS OTHERWISE NOTED. STAGING AREA AND SITE ACCESS RESTORATION SHALL BE INCLUDED IN THE COST OF THE HAUL ROUTE.
16. APPROXIMATE LOCATIONS OF UNDERGROUND UTILITIES ARE SHOWN THROUGHOUT THESE PLANS. THE CONTRACTOR SHALL DETERMINE EXACT LOCATIONS AND PROTECT THESE UTILITIES DURING CONSTRUCTION. ANY UTILITIES DAMAGED DURING CONSTRUCTION SHALL BE REPAIRED AT THE CONTRACTOR'S EXPENSE. CONTRACTOR SHALL COORDINATE WITH THE PROPER PERSONS FOR THE PURPOSE OF LOCATING AND PROTECTING EXISTING UNDERGROUND UTILITIES.
17. THE CONTRACTOR MUST AT ALL TIMES MAINTAIN PROPER DRAINAGE FOR ALL AREAS AFFECTED BY HIS WORK.

HANSON
Engineering | Planning | Allied Services

Offices Nationwide
www.hanson-inc.com

Hanson Professional Services Inc.
1525 S. 6th Street
Springfield, IL 62703
phone: 217-788-2450
fax: 217-788-2503

Illinois Licensed
Professional Service Corporation
#184-001084

ST. LOUIS DOWNTOWN AIRPORT
Bi-State Development Agency
6100 Archview Drive
Cahokia, IL 62206-1445

Exp 11/30/17
STATE OF ILLINOIS
BARRY S. STOLZ
062-057281
LICENSED PROFESSIONAL ENGINEER
6/9/17

TAXIWAY B RELOCATION, PHASE 1:
FILLET IMPROVEMENTS

SBG No:
3-17-SBGP-133/134
IDA No: CPS-4505

Contract No. SD058

NO.	DATE	DESCRIPTION		
		DES	DWN	REV

ISSUE: JUNE 9, 2017
PROJECT NO: 16A0107
CAD FILE: G-003-SOW.DWG
DESIGN BY: JRH 01/12/2017
DRAWN BY: JRH 01/12/2017
REVIEWED BY: BSS 06/06/17

SHEET TITLE

SCOPE OF WORK

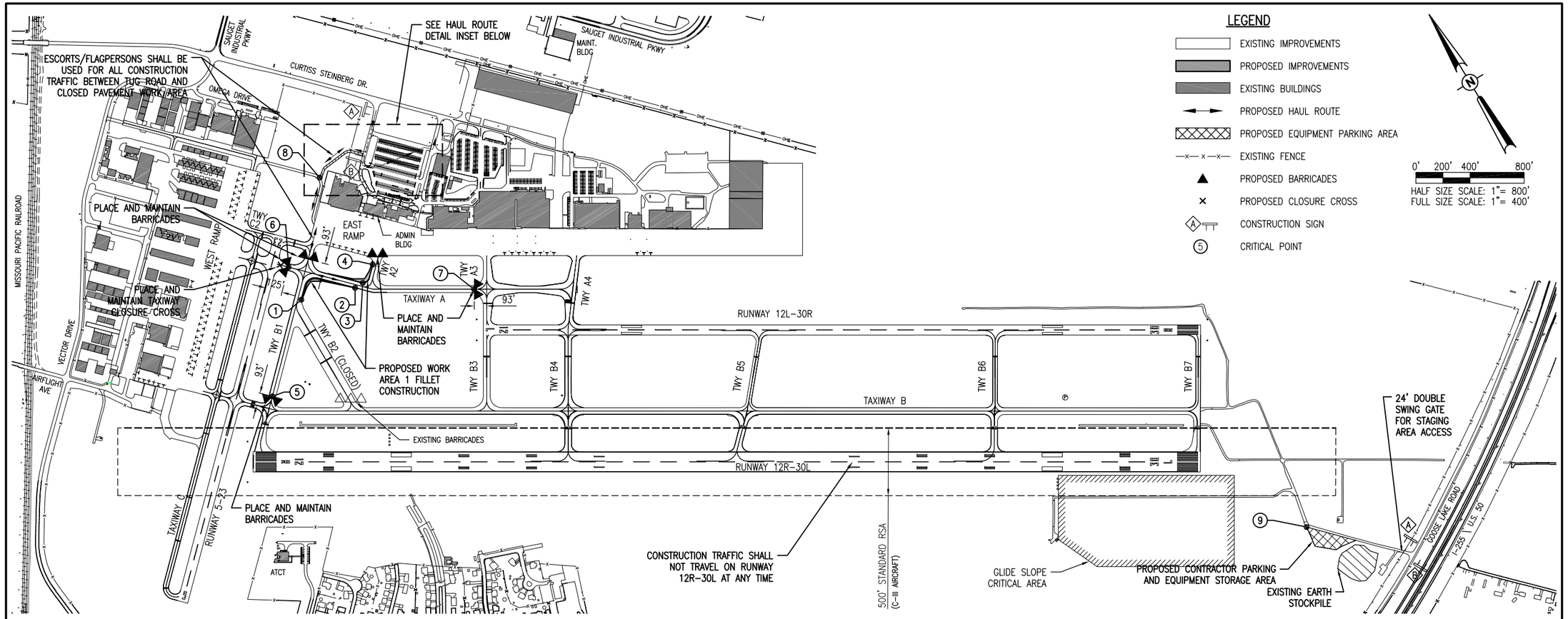

CRITICAL POINTS DATA					
POINT #	LATITUDE	LONGITUDE	GROUND ELEVATION	PROPOSED EQUIPMENT HEIGHT	PROPOSED EQUIPMENT ELEVATION
1	N 38° 34' 34.55"	W 90° 09' 42.40"	415.0	25.0'	440.0
2	N 38° 34' 33.19"	W 90° 09' 37.57"	409.0	25.0'	434.0
3	N 38° 34' 33.19"	W 90° 09' 36.72"	410.0	25.0'	435.0
4	N 38° 34' 33.94"	W 90° 09' 35.02"	412.0	25.0'	437.0
5	N 38° 34' 29.70"	W 90° 09' 49.45"	411.5	2.0'	413.5
6	N 38° 34' 37.06"	W 90° 09' 41.78"	410.0	2.0'	412.0
7	N 38° 34' 28.47"	W 90° 09' 28.27"	409.0	2.0'	411.0
8	N 38° 34' 41.39"	W 90° 09' 34.88"	409.0	2.0'	411.0
9	N 38° 33' 41.34"	W 90° 08' 34.53"	404.0	25.0'	429.0

WORK AREA NOTES

1. THE CONTRACTOR MAY ONLY WORK IN ONE WORK AREA AT A TIME. ONCE A WORK AREA IS CLOSED TO AIRCRAFT TRAFFIC AND CONSTRUCTION BEGINS, THAT WORK AREA CONSTRUCTION SHALL BE COMPLETED IN ITS ENTIRETY AND ACCEPTED BY THE OWNER FOR THE PURPOSE OF OPENING THE TAXIWAY PAVEMENT TO AIRCRAFT TRAFFIC, PRIOR TO CLOSING ANOTHER WORK AREA TO AIRCRAFT.
2. AIRPORT SECURITY SHALL BE MAINTAINED THROUGHOUT THE PROJECT. THE CONTRACTOR SHALL BE RESTRICTED TO THE DESIGNATED WORK AREAS. THE CONTRACTOR SHALL ENSURE THAT ACCESS POINTS USED BY CONSTRUCTION VEHICLES AND PERSONNEL ARE MONITORED WHEN OPEN AND CLOSED (ELECTRIC GATES) OR LOCKED (MANUAL GATES) WHEN NOT IN USE TO PREVENT UNAUTHORIZED ACCESS TO THE AIRPORT MOVEMENT AREA.
3. CLOSURE CROSSES AND BARRICADES SHALL BE IN PLACE PRIOR TO BEGINNING CONSTRUCTION.
4. AT ALL TIMES, THE CONTRACTOR'S OPERATIONS SHALL BE SUCH AS TO MINIMIZE CLOSURES.
5. AT THE COMPLETION OF ALL CONSTRUCTION, THE HAUL ROUTES AND CONSTRUCTION EQUIPMENT PARKING AREA SHALL BE RESTORED TO PRE-CONSTRUCTION CONDITIONS PER THE SPECIFICATIONS.
6. THE COSTS FOR PROVISION, PLACEMENT, MAINTENANCE AND REMOVAL OF BARRICADES AND CLOSURE CROSSES AND ALL ASSOCIATED INCIDENTALS SHALL BE PAID FOR UNDER ITEM AR150520 MOBILIZATION FOR THE BASE BID AND AS150520 MOBILIZATION FOR THE ADDITIVE ALTERNATE BID.
7. THE COSTS FOR MAINTENANCE OF ACCESS GATES, CONSTRUCTION/MAINTENANCE/RESTORATION OF HAUL ROUTES AND EQUIPMENT STAGING AREA, TEMPORARY SIGNAGE AND ALL ASSOCIATED INCIDENTALS SHALL BE PAID FOR UNDER ITEM AR150540 HAUL ROUTE FOR THE BASE BID AND ADDITIVE ALTERNATE BID, REGARDLESS OF AWARD.
8. PRIOR TO THE ISSUANCE OF A CONSTRUCTION NOTICE-TO-PROCEED (NTP), THE CONTRACTOR SHALL BE RESPONSIBLE FOR PREPARING AND SUBMITTING A SAFETY PLAN COMPLIANCE DOCUMENT IN ACCORDANCE WITH FAA ADVISORY CIRCULAR 150/5370-2F, PARAGRAPH 204B, OR EQUIVALENT SECTION IN SUBSEQUENT/CURRENT ISSUE. THE AIRPORT DIRECTOR SHALL APPROVE THIS DOCUMENT AND SUBMIT TO THE DIVISION OF AERONAUTICS FOR APPROVAL PRIOR TO THE NTP ISSUANCE.

OPERATIONAL SAFETY NOTES

1. FLAGPERSONS AND/OR ESCORTS WITH RADIOS SHALL BE REQUIRED TO CONTROL VEHICLE TRAFFIC ACROSS ACTIVE AIRFIELD PAVEMENTS. NO CONSTRUCTION PERSONNEL/EQUIPMENT ALLOWED WITHIN THE RUNWAY SAFETY AREA (RSA) OR TAXIWAY SAFETY AREA (TSA) WHEN PAVEMENTS ARE OPEN TO AIRCRAFT TRAFFIC. PAVEMENTS ARE TO BE KEPT FREE OF DEBRIS AT ALL TIMES. ANY DAMAGE TO PAVEMENTS BY THE CONTRACTOR'S FORCES SHALL BE REPAIRED AT NO ADDITIONAL COST TO THE CONTRACT.
2. CONSTRUCTION PERSONNEL WILL BE REQUIRED TO ATTEND AIRFIELD DRIVER SAFETY TRAINING (APPROXIMATELY 1 HOUR) AT THE AIRPORT PRIOR TO BEGINNING CONSTRUCTION ACTIVITIES.

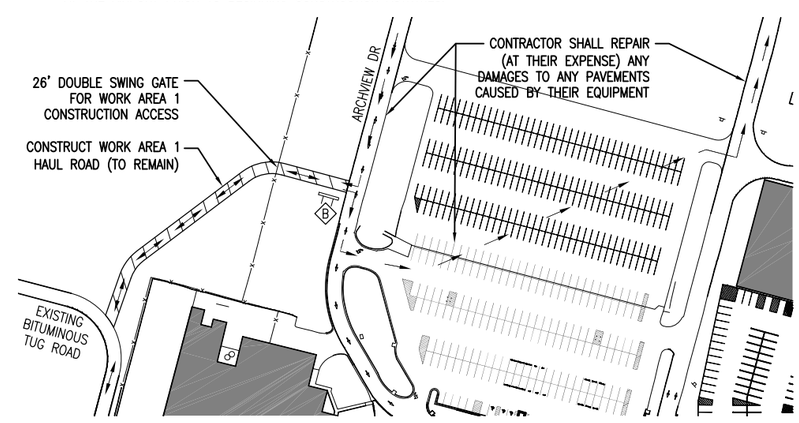

HAUL ROUTE DETAIL
SCALE: 1"= 200' (HALF) / 1" = 100' (FULL)

HANSON
Engineering | Planning | Allied Services
Offices Nationwide
www.hanson-inc.com

Hanson Professional Services Inc.
1525 S. 6th Street
Springfield, IL 62703
phone: 217-788-2450
fax: 217-788-2503

Illinois Licensed
Professional Service Corporation
#184-001084

ST. LOUIS DOWNTOWN AIRPORT
Bi-State Development Agency
6100 Archview Drive
Cahokia, IL 62206-1445

EXP 11/30/17
STATE OF ILLINOIS
BARRY S. STOLZ
062-057281
LICENSED
PROFESSIONAL ENGINEER
6/9/17

TAXIWAY B RELOCATION, PHASE 1: FILLET IMPROVEMENTS

SBG No: 3-17-SBGP-133/134
IDA No: CPS-4505

Contract No. SD058

NO.	DATE	DESCRIPTION		
		DES	DWN	REV

ISSUE: JUNE 9, 2017
PROJECT NO: 16A0107
CAD FILE: G-004-SFY.DWG
DESIGN BY: JRH 01/12/2017
DRAWN BY: JRH 01/12/2017
REVIEWED BY: BSS 06/06/17

SHEET TITLE

PROPOSED CONSTRUCTION SAFETY PLAN - WORK AREA 1

JUN 20, 2017 11:33 AM STOLZ01547
I:\16JOBS\16A0107\16A0107D\CAD\AIRPORT\SHEET\G-004-SFY.DWG

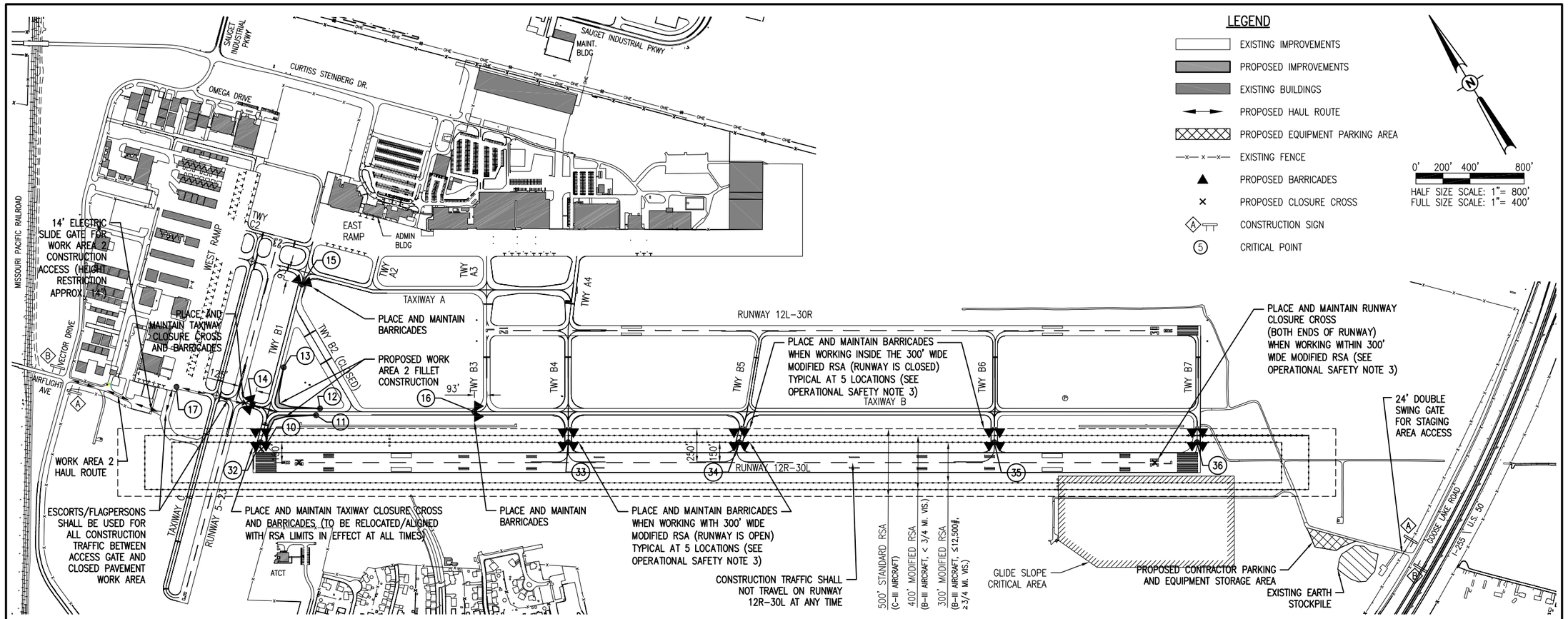

CRITICAL POINTS DATA

POINT #	LATITUDE	LONGITUDE	GROUND ELEVATION	PROPOSED EQUIPMENT HEIGHT	PROPOSED EQUIPMENT ELEVATION
10	N 38° 34' 27.02"	W 90° 09' 52.26"	414.0	25.0'	439.0
11	N 38° 34' 26.88"	W 90° 09' 46.92"	415.0	25.0'	440.0
12	N 38° 34' 27.14"	W 90° 09' 46.28"	415.0	25.0'	440.0
13	N 38° 34' 31.10"	W 90° 09' 47.10"	416.0	25.0'	441.0
14	N 38° 34' 30.00"	W 90° 09' 51.42"	415.0	2.0'	417.0
15	N 38° 34' 35.51"	W 90° 09' 41.55"	413.0	2.0'	415.0
16	N 38° 34' 20.93"	W 90° 09' 34.29"	413.0	2.0'	415.0
17	N 38° 34' 34.07"	W 90° 09' 56.51"	414.0	25.0'	439.0
32	N 38° 34' 27.36"	W 90° 09' 52.63"	413.0	2.0'	415.0
33	N 38° 34' 15.39"	W 90° 09' 28.42"	414.0	2.0'	416.0
34	N 38° 34' 08.73"	W 90° 09' 14.95"	414.0	2.0'	416.0
35	N 38° 33' 58.79"	W 90° 08' 54.87"	410.0	2.0'	412.0
36	N 38° 33' 50.89"	W 90° 08' 38.91"	410.0	2.0'	412.0

WORK AREA NOTES

1. THE CONTRACTOR MAY ONLY WORK IN ONE WORK AREA AT A TIME. ONCE A WORK AREA IS CLOSED TO AIRCRAFT TRAFFIC AND CONSTRUCTION BEGINS, THAT WORK AREA CONSTRUCTION SHALL BE COMPLETED IN ITS ENTIRETY AND ACCEPTED BY THE OWNER FOR THE PURPOSE OF OPENING THE TAXIWAY PAVEMENT TO AIRCRAFT TRAFFIC, PRIOR TO CLOSING ANOTHER WORK AREA TO AIRCRAFT.
2. AIRPORT SECURITY SHALL BE MAINTAINED THROUGHOUT THE PROJECT. THE CONTRACTOR SHALL BE RESTRICTED TO THE DESIGNATED WORK AREAS. THE CONTRACTOR SHALL ENSURE THAT ACCESS POINTS USED BY CONSTRUCTION VEHICLES AND PERSONNEL ARE MONITORED WHEN OPEN AND CLOSED (ELECTRIC GATES) OR LOCKED (MANUAL GATES) WHEN NOT IN USE TO PREVENT UNAUTHORIZED ACCESS TO THE AIRPORT MOVEMENT AREA.
3. CLOSURE CROSSES AND BARRICADES SHALL BE IN PLACE PRIOR TO BEGINNING CONSTRUCTION.
4. AT ALL TIMES, THE CONTRACTOR'S OPERATIONS SHALL BE SUCH AS TO MINIMIZE CLOSURES.
5. AT THE COMPLETION OF ALL CONSTRUCTION, THE HAUL ROUTES AND CONSTRUCTION EQUIPMENT PARKING AREA SHALL BE RESTORED TO PRE-CONSTRUCTION CONDITIONS PER THE SPECIFICATIONS.
6. THE COSTS FOR PROVISION, PLACEMENT, MAINTENANCE AND REMOVAL OF BARRICADES AND CLOSURE CROSSES AND ALL ASSOCIATED INCIDENTALS SHALL BE PAID FOR UNDER ITEM AR150520 MOBILIZATION FOR THE BASE BID AND AS150520 MOBILIZATION FOR THE ADDITIVE ALTERNATE BID.
7. THE COSTS FOR MAINTENANCE OF ACCESS GATES, CONSTRUCTION/MAINTENANCE/RESTORATION OF HAUL ROUTES AND EQUIPMENT STAGING AREA, TEMPORARY SIGNAGE AND ALL ASSOCIATED INCIDENTALS SHALL BE PAID FOR UNDER ITEM AR150540 HAUL ROUTE FOR THE BASE BID AND ADDITIVE ALTERNATE BID, REGARDLESS OF AWARD.
8. PRIOR TO THE ISSUANCE OF A CONSTRUCTION NOTICE-TO-PROCEED (NTP), THE CONTRACTOR SHALL BE RESPONSIBLE FOR PREPARING AND SUBMITTING A SAFETY PLAN COMPLIANCE DOCUMENT IN ACCORDANCE WITH FAA ADVISORY CIRCULAR 150/5370-2F, PARAGRAPH 204B, OR EQUIVALENT SECTION IN SUBSEQUENT/ CURRENT ISSUE. THE AIRPORT DIRECTOR SHALL APPROVE THIS DOCUMENT AND SUBMIT TO THE DIVISION OF AERONAUTICS FOR APPROVAL PRIOR TO THE NTP ISSUANCE.

OPERATIONAL SAFETY NOTES

1. FLAGPERSONS AND/OR ESCORTS WITH RADIOS SHALL BE REQUIRED TO CONTROL VEHICLE TRAFFIC ACROSS ACTIVE AIRFIELD PAVEMENTS. NO CONSTRUCTION PERSONNEL/EQUIPMENT ALLOWED WITHIN THE RUNWAY SAFETY AREA (RSA) OR TAXIWAY SAFETY AREA (TSA) WHEN PAVEMENTS ARE OPEN TO AIRCRAFT TRAFFIC. PAVEMENTS ARE TO BE KEPT FREE OF DEBRIS AT ALL TIMES. ANY DAMAGE TO PAVEMENTS BY THE CONTRACTOR'S FORCES SHALL BE REPAIRED AT NO ADDITIONAL COST TO THE CONTRACT.
2. CONSTRUCTION PERSONNEL WILL BE REQUIRED TO ATTEND AIRFIELD DRIVER SAFETY TRAINING (APPROXIMATELY 1 HOUR) AT THE AIRPORT PRIOR TO BEGINNING CONSTRUCTION ACTIVITIES.
3. DURING CONSTRUCTION IN WORK AREAS 2 AND 3, THE OWNER WILL ISSUE A NOTAM TO TEMPORARILY REDUCE THE WIDTH OF THE RUNWAY 12R/30L SAFETY AREA (RSA) FROM 500' WIDE TO 300' WIDE (B-III AIRCRAFT, ≤12,500#, ≥ 3/4 MI. VIS.) ANY WORK REQUIRED WITHIN 150' OF THE RUNWAY 12R/30L CENTERLINE WILL REQUIRE THE RUNWAY TO BE SHUTDOWN TO AIRCRAFT TRAFFIC. WORK REQUIRED WITHIN THE REDUCED RUNWAY SAFETY AREA MAY BE REQUIRED TO BE SCHEDULED AROUND CERTAIN PEAK TRAFFIC TIMES, AND MUST BE COORDINATED WITH THE OWNER IN ADVANCE.
4. THE CONTRACTOR SHALL LOCATE THE REDUCED RSA LIMITS FOR WORK AREAS 2 AND 3 AT THE START OF CONSTRUCTION AND WILL PLACE FLAGGED LATHE ALONG IT WITHIN THE WORK AREA LIMITS. THIS LINE WILL BE THE LIMITS THAT ALL CONTRACTOR PERSONNEL MAY VENTURE WHEN THE RUNWAY IS NOT CLOSED. THE CONTRACTOR WILL MAINTAIN THESE LATHE LINES DURING CONSTRUCTION.
5. THE OWNER RESERVES THE RIGHT TO ALLOW SPECIFIC CRITICAL AIRCRAFT (C-III) OPERATIONS DURING CONSTRUCTION THAT WILL REQUIRE THE STANDARD RSA WIDTH OF 500' TO BE TEMPORARILY REINSTATED. IN THESE INSTANCES, THE CONTRACTOR WILL BE REQUIRED TO TEMPORARILY MOVE THEIR PERSONNEL AND EQUIPMENT OUTSIDE OF THE STANDARD RSA LIMITS UNTIL THE AIRCRAFT OPERATION IS COMPLETED (ESTIMATED MAXIMUM 30 MINUTES). THE CONTRACTOR WILL BE GIVEN AS MUCH ADVANCE NOTICE AS POSSIBLE FOR EACH OCCURRENCE. ANTICIPATED FREQUENCY OF THIS OCCURRENCE IS 5 PER WEEK, ON AVERAGE, HOWEVER THE OWNER WILL ATTEMPT TO SCHEDULE CRITICAL AIRCRAFT OPERATIONS OUTSIDE OF THE NORMAL DAILY CONSTRUCTION SCHEDULE AS BEST AS POSSIBLE TO AVOID INTERRUPTIONS TO CONSTRUCTION PROGRESS.
6. IF WEATHER AND ATMOSPHERIC CONDITIONS RESULT IN A LESS THAN ¾-MILE VISIBILITY, THE OWNER RESERVES THE RIGHT TO MODIFY THE TEMPORARY RUNWAY SAFETY AREA TO A 400' WIDTH IN ORDER TO ALLOW CONTINUED AIRCRAFT OPERATIONS ON THE RUNWAY (B-III AIRCRAFT, <3/4 MI. VIS.) IF THIS SCENARIO OCCURS, ANY WORK REQUIRED WITHIN 200' OF THE RUNWAY 12R/30L CENTERLINE WILL REQUIRE THE RUNWAY TO BE SHUTDOWN TO AIRCRAFT TRAFFIC. WORK REQUIRED WITHIN THE REDUCED RUNWAY SAFETY AREA MAY BE REQUIRED TO BE SCHEDULED AROUND CERTAIN PEAK TRAFFIC TIMES, AND MUST BE COORDINATED WITH THE OWNER IN ADVANCE.

HANSON
Engineering | Planning | Allied Services
Offices Nationwide
www.hanson-inc.com
Hanson Professional Services Inc.
1525 S. 6th Street
Springfield, IL 62703
phone: 217-788-2450
fax: 217-788-2503
Illinois Licensed
Professional Service Corporation
#184-001084

ST. LOUIS DOWNTOWN AIRPORT
Bi-State Development Agency
6100 Archview Drive
Cahokia, IL 62206-1445

EXP 11/30/17 STATE OF ILLINOIS BARRY S. STOLZ 062-057281 LICENSED PROFESSIONAL ENGINEER 6/9/17

TAXIWAY B RELOCATION, PHASE 1:
FILLET IMPROVEMENTS

SBG No:
3-17-SBGP-133/134
IDA No: CPS-4505

Contract No. SD058

NO.	DATE	DESCRIPTION		
		DES	DWN	REV

ISSUE: JUNE 9, 2017
PROJECT NO: 16A0107
CAD FILE: G-004-SFY.DWG
DESIGN BY: JRH 01/12/2017
DRAWN BY: JRH 01/12/2017
REVIEWED BY: BSS 06/06/17

SHEET TITLE

PROPOSED CONSTRUCTION SAFETY PLAN - WORK AREA 2

JUN 20, 2017 11:33 AM STOLZ01547
R:\16JOBS\16A0107\16A0107D\CAD\AIRPORT\SHEET\G-004-SFY.DWG

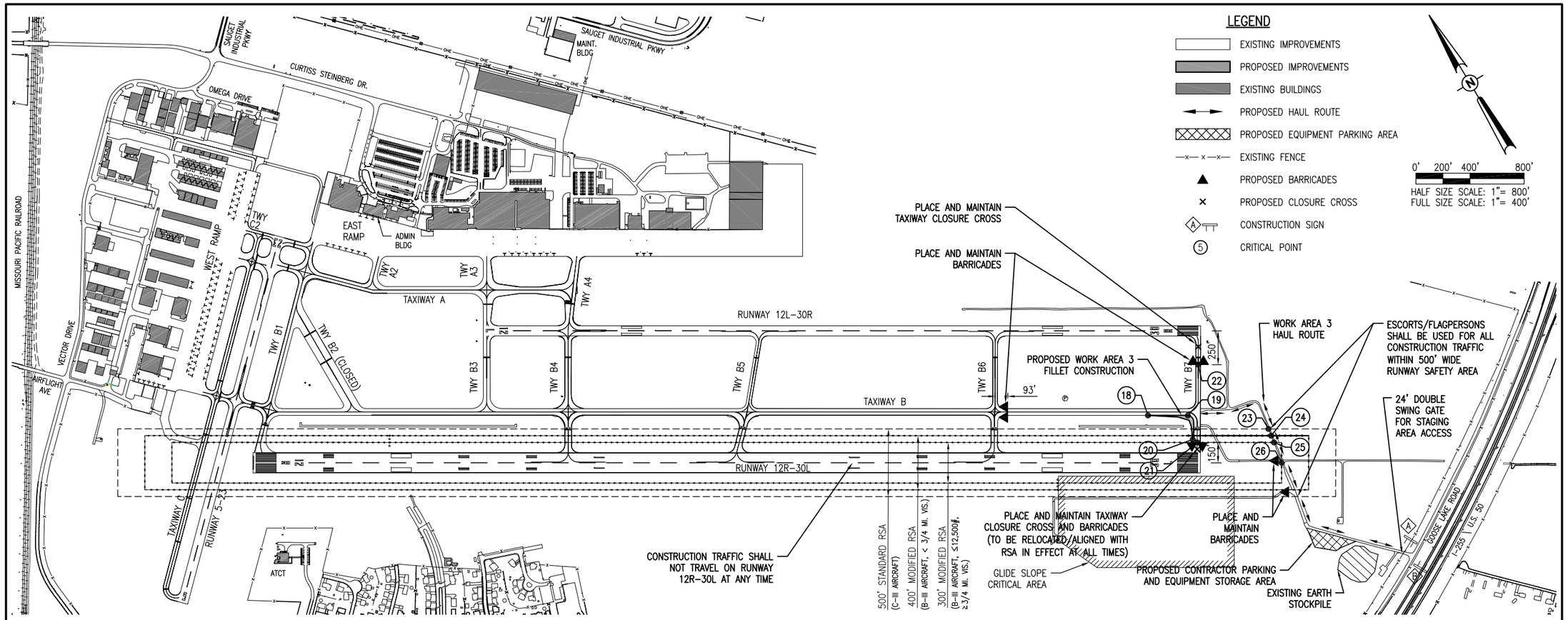

CRITICAL POINTS DATA					
POINT #	LATITUDE	LONGITUDE	GROUND ELEVATION	PROPOSED EQUIPMENT HEIGHT	PROPOSED EQUIPMENT ELEVATION
18	N 38° 33' 54.48"	W 90° 08' 41.43"	409.0	25.0'	434.0
19	N 38° 33' 52.92"	W 90° 08' 38.29"	408.0	25.0'	433.0
20	N 38° 33' 51.25"	W 90° 08' 39.10"	413.0	25.0'	438.0
21	N 38° 33' 50.88"	W 90° 08' 38.89"	414.0	2.0'	416.0
22	N 38° 33' 55.65"	W 90° 08' 34.96"	405.0	2.0'	407.0
23	N 38° 33' 48.95"	W 90° 08' 32.62"	406.7	25.0'	431.7
24	N 38° 33' 48.42"	W 90° 08' 32.74"	406.8	25.0'	431.8
25	N 38° 33' 47.89"	W 90° 08' 32.85"	406.7	25.0'	431.7
26	N 38° 33' 46.34"	W 90° 08' 33.26"	407.0	25.0'	432.0

WORK AREA NOTES

1. THE CONTRACTOR MAY ONLY WORK IN ONE WORK AREA AT A TIME. ONCE A WORK AREA IS CLOSED TO AIRCRAFT TRAFFIC AND CONSTRUCTION BEGINS, THAT WORK AREA CONSTRUCTION SHALL BE COMPLETED IN ITS ENTIRETY AND ACCEPTED BY THE OWNER FOR THE PURPOSE OF OPENING THE TAXIWAY PAVEMENT TO AIRCRAFT TRAFFIC, PRIOR TO CLOSING ANOTHER WORK AREA TO AIRCRAFT.
2. AIRPORT SECURITY SHALL BE MAINTAINED THROUGHOUT THE PROJECT. THE CONTRACTOR SHALL BE RESTRICTED TO THE DESIGNATED WORK AREAS. THE CONTRACTOR SHALL ENSURE THAT ACCESS POINTS USED BY CONSTRUCTION VEHICLES AND PERSONNEL ARE MONITORED WHEN OPEN AND CLOSED (ELECTRIC GATES) OR LOCKED (MANUAL GATES) WHEN NOT IN USE TO PREVENT UNAUTHORIZED ACCESS TO THE AIRPORT MOVEMENT AREA.
3. CLOSURE CROSSES AND BARRICADES SHALL BE IN PLACE PRIOR TO BEGINNING CONSTRUCTION.
4. AT ALL TIMES, THE CONTRACTOR'S OPERATIONS SHALL BE SUCH AS TO MINIMIZE CLOSURES.
5. AT THE COMPLETION OF ALL CONSTRUCTION, THE HAUL ROUTES AND CONSTRUCTION EQUIPMENT PARKING AREA SHALL BE RESTORED TO PRE-CONSTRUCTION CONDITIONS PER THE SPECIFICATIONS.
6. THE COSTS FOR PROVISION, PLACEMENT, MAINTENANCE AND REMOVAL OF BARRICADES AND CLOSURE CROSSES AND ALL ASSOCIATED INCIDENTALS SHALL BE PAID FOR UNDER ITEM AR150520 MOBILIZATION FOR THE BASE BID AND AS150520 MOBILIZATION FOR THE ADDITIVE ALTERNATE BID.
7. THE COSTS FOR MAINTENANCE OF ACCESS GATES, CONSTRUCTION/MAINTENANCE/RESTORATION OF HAUL ROUTES AND EQUIPMENT STAGING AREA, TEMPORARY SIGNAGE AND ALL ASSOCIATED INCIDENTALS SHALL BE PAID FOR UNDER ITEM AR150540 HAUL ROUTE FOR THE BASE BID AND ADDITIVE ALTERNATE BID, REGARDLESS OF AWARD.
8. PRIOR TO THE ISSUANCE OF A CONSTRUCTION NOTICE-TO-PROCEED (NTP), THE CONTRACTOR SHALL BE RESPONSIBLE FOR PREPARING AND SUBMITTING A SAFETY PLAN COMPLIANCE DOCUMENT IN ACCORDANCE WITH FAA ADVISORY CIRCULAR 150/5370-2F, PARAGRAPH 204B, OR EQUIVALENT SECTION IN SUBSEQUENT/ CURRENT ISSUE. THE AIRPORT DIRECTOR SHALL APPROVE THIS DOCUMENT AND SUBMIT TO THE DIVISION OF AERONAUTICS FOR APPROVAL PRIOR TO THE NTP ISSUANCE.

OPERATIONAL SAFETY NOTES

1. FLAGPERSONS AND/OR ESCORTS WITH RADIOS SHALL BE REQUIRED TO CONTROL VEHICLE TRAFFIC ACROSS ACTIVE AIRFIELD PAVEMENTS. NO CONSTRUCTION PERSONNEL/EQUIPMENT ALLOWED WITHIN THE RUNWAY SAFETY AREA (RSA) OR TAXIWAY SAFETY AREA (TSA) WHEN PAVEMENTS ARE OPEN TO AIRCRAFT TRAFFIC. PAVEMENTS ARE TO BE KEPT FREE OF DEBRIS AT ALL TIMES. ANY DAMAGE TO PAVEMENTS BY THE CONTRACTOR'S FORCES SHALL BE REPAIRED AT NO ADDITIONAL COST TO THE CONTRACT.
2. CONSTRUCTION PERSONNEL WILL BE REQUIRED TO ATTEND AIRFIELD DRIVER SAFETY TRAINING (APPROXIMATELY 1 HOUR) AT THE AIRPORT PRIOR TO BEGINNING CONSTRUCTION ACTIVITIES.
3. DURING CONSTRUCTION IN WORK AREAS 2 AND 3, THE OWNER WILL ISSUE A NOTAM TO TEMPORARILY REDUCE THE WIDTH OF THE RUNWAY 12R/30L SAFETY AREA (RSA) FROM 500' WIDE TO 300' WIDE (B-III AIRCRAFT, ≤12,500#, ≥ 3/4 MI. VIS.) ANY WORK REQUIRED WITHIN 150' OF THE RUNWAY 12R/30L CENTERLINE WILL REQUIRE THE RUNWAY TO BE SHUTDOWN TO AIRCRAFT TRAFFIC. WORK REQUIRED WITHIN THE REDUCED RUNWAY SAFETY AREA MAY BE REQUIRED TO BE SCHEDULED AROUND CERTAIN PEAK TRAFFIC TIMES, AND MUST BE COORDINATED WITH THE OWNER IN ADVANCE.
4. THE CONTRACTOR SHALL LOCATE THE REDUCED RSA LIMITS FOR WORK AREAS 2 AND 3 AT THE START OF CONSTRUCTION AND WILL PLACE FLAGGED LATHE ALONG IT WITHIN THE WORK AREA LIMITS. THIS LINE WILL BE THE LIMITS THAT ALL CONTRACTOR PERSONNEL MAY VENTURE WHEN THE RUNWAY IS NOT CLOSED. THE CONTRACTOR WILL MAINTAIN THESE LATHE LINES DURING CONSTRUCTION.
5. THE OWNER RESERVES THE RIGHT TO ALLOW SPECIFIC CRITICAL AIRCRAFT (C-III) OPERATIONS DURING CONSTRUCTION THAT WILL REQUIRE THE STANDARD RSA WIDTH OF 500' TO BE TEMPORARILY REINSTATED. IN THESE INSTANCES, THE CONTRACTOR WILL BE REQUIRED TO TEMPORARILY MOVE THEIR PERSONNEL AND EQUIPMENT OUTSIDE OF THE STANDARD RSA LIMITS UNTIL THE AIRCRAFT OPERATION IS COMPLETED (ESTIMATED MAXIMUM 30 MINUTES). THE CONTRACTOR WILL BE GIVEN AS MUCH ADVANCE NOTICE AS POSSIBLE FOR EACH OCCURRENCE. ANTICIPATED FREQUENCY OF THIS OCCURRENCE IS 5 PER WEEK, ON AVERAGE, HOWEVER THE OWNER WILL ATTEMPT TO SCHEDULE CRITICAL AIRCRAFT OPERATIONS OUTSIDE OF THE NORMAL DAILY CONSTRUCTION SCHEDULE AS BEST AS POSSIBLE TO AVOID INTERRUPTIONS TO CONSTRUCTION PROGRESS.
6. IF WEATHER AND ATMOSPHERIC CONDITIONS RESULT IN A LESS THAN ¾-MILE VISIBILITY, THE OWNER RESERVES THE RIGHT TO MODIFY THE TEMPORARY RUNWAY SAFETY AREA TO A 400' WIDTH IN ORDER TO ALLOW CONTINUED AIRCRAFT OPERATIONS ON THE RUNWAY (B-III AIRCRAFT, <3/4 MI. VIS.) IF THIS SCENARIO OCCURS, ANY WORK REQUIRED WITHIN 200' OF THE RUNWAY 12R/30L CENTERLINE WILL REQUIRE THE RUNWAY TO BE SHUTDOWN TO AIRCRAFT TRAFFIC. WORK REQUIRED WITHIN THE REDUCED RUNWAY SAFETY AREA MAY BE REQUIRED TO BE SCHEDULED AROUND CERTAIN PEAK TRAFFIC TIMES, AND MUST BE COORDINATED WITH THE OWNER IN ADVANCE.

HANSON
Engineering | Planning | Allied Services
Offices Nationwide
www.hanson-inc.com
Hanson Professional Services Inc.
1525 S. 6th Street
Springfield, IL 62703
phone: 217-788-2450
fax: 217-788-2503
Illinois Licensed
Professional Service Corporation
#184-001084

ST. LOUIS DOWNTOWN AIRPORT
Bi-State Development Agency
6100 Archview Drive
Cahokia, IL 62206-1445

EXP 11/30/17 STATE OF ILLINOIS BARRY S. STOLZ 062-057281 LICENSED PROFESSIONAL ENGINEER
6/9/17

TAXIWAY B RELOCATION, PHASE 1:
FILLET IMPROVEMENTS

SBG No:
3-17-SBGP-133/134
IDA No: CPS-4505

Contract No. SD058

NO.	DATE	DESCRIPTION		
		DES	DWN	REV

ISSUE: JUNE 9, 2017
PROJECT NO: 16A0107
CAD FILE: G-004-SFY.DWG
DESIGN BY: JRH 01/12/2017
DRAWN BY: JRH 01/12/2017
REVIEWED BY: BSS 06/06/17

SHEET TITLE

PROPOSED CONSTRUCTION SAFETY PLAN - WORK AREA 3

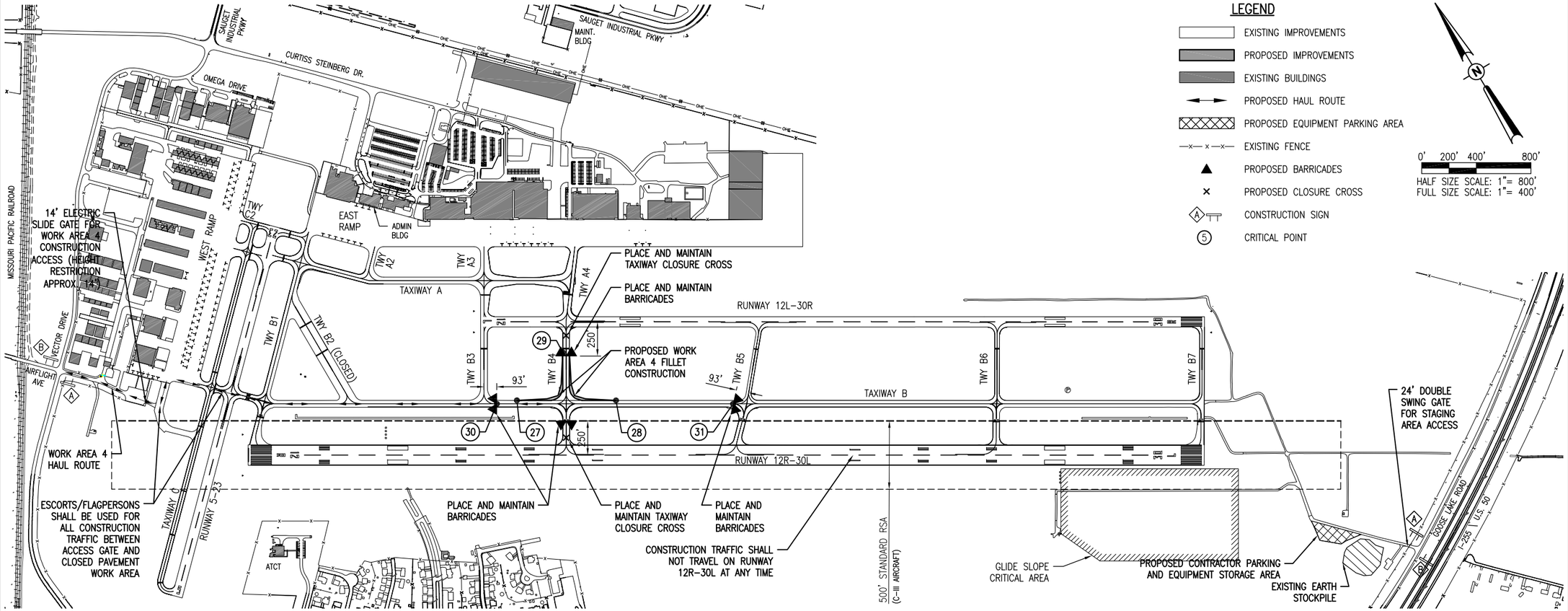

CRITICAL POINTS DATA					
POINT #	LATITUDE	LONGITUDE	GROUND ELEVATION	PROPOSED EQUIPMENT HEIGHT	PROPOSED EQUIPMENT ELEVATION
27	N 38° 34' 19.38"	W 90° 09' 30.58"	414.0	25.0'	439.0
28	N 38° 34' 15.55"	W 90° 09' 22.85"	411.0	25.0'	436.0
29	N 38° 34' 20.55"	W 90° 09' 24.65"	412.0	25.0'	437.0
30	N 38° 34' 19.94"	W 90° 09' 32.32"	413.0	2.0'	415.0
31	N 38° 34' 10.82"	W 90° 09' 13.89"	412.0	2.0'	414.0

WORK AREA NOTES

1. THE CONTRACTOR MAY ONLY WORK IN ONE WORK AREA AT A TIME. ONCE A WORK AREA IS CLOSED TO AIRCRAFT TRAFFIC AND CONSTRUCTION BEGINS, THAT WORK AREA CONSTRUCTION SHALL BE COMPLETED IN ITS ENTIRETY AND ACCEPTED BY THE OWNER FOR THE PURPOSE OF OPENING THE TAXIWAY PAVEMENT TO AIRCRAFT TRAFFIC, PRIOR TO CLOSING ANOTHER WORK AREA TO AIRCRAFT.
2. AIRPORT SECURITY SHALL BE MAINTAINED THROUGHOUT THE PROJECT. THE CONTRACTOR SHALL BE RESTRICTED TO THE DESIGNATED WORK AREAS. THE CONTRACTOR SHALL ENSURE THAT ACCESS POINTS USED BY CONSTRUCTION VEHICLES AND PERSONNEL ARE MONITORED WHEN OPEN AND CLOSED (ELECTRIC GATES) OR LOCKED (MANUAL GATES) WHEN NOT IN USE TO PREVENT UNAUTHORIZED ACCESS TO THE AIRPORT MOVEMENT AREA.
3. CLOSURE CROSSES AND BARRICADES SHALL BE IN PLACE PRIOR TO BEGINNING CONSTRUCTION.
4. AT ALL TIMES, THE CONTRACTOR'S OPERATIONS SHALL BE SUCH AS TO MINIMIZE CLOSURES.
5. AT THE COMPLETION OF ALL CONSTRUCTION, THE HAUL ROUTES AND CONSTRUCTION EQUIPMENT PARKING AREA SHALL BE RESTORED TO PRE-CONSTRUCTION CONDITIONS PER THE SPECIFICATIONS.
6. THE COSTS FOR PROVISION, PLACEMENT, MAINTENANCE AND REMOVAL OF BARRICADES AND CLOSURE CROSSES AND ALL ASSOCIATED INCIDENTALS SHALL BE PAID FOR UNDER ITEM AR150520 MOBILIZATION FOR THE BASE BID AND AS150520 MOBILIZATION FOR THE ADDITIVE ALTERNATE BID.
7. THE COSTS FOR MAINTENANCE OF ACCESS GATES, CONSTRUCTION/MAINTENANCE/RESTORATION OF HAUL ROUTES AND EQUIPMENT STAGING AREA, TEMPORARY SIGNAGE AND ALL ASSOCIATED INCIDENTALS SHALL BE PAID FOR UNDER ITEM AR150540 HAUL ROUTE FOR THE BASE BID AND ADDITIVE ALTERNATE BID, REGARDLESS OF AWARD.
8. PRIOR TO THE ISSUANCE OF A CONSTRUCTION NOTICE-TO-PROCEED (NTP), THE CONTRACTOR SHALL BE RESPONSIBLE FOR PREPARING AND SUBMITTING A SAFETY PLAN COMPLIANCE DOCUMENT IN ACCORDANCE WITH FAA ADVISORY CIRCULAR 150/5370-2F, PARAGRAPH 204B, OR EQUIVALENT SECTION IN SUBSEQUENT/ CURRENT ISSUE. THE AIRPORT DIRECTOR SHALL APPROVE THIS DOCUMENT AND SUBMIT TO THE DIVISION OF AERONAUTICS FOR APPROVAL PRIOR TO THE NTP ISSUANCE.

OPERATIONAL SAFETY NOTES

1. FLAGPERSONS AND/OR ESCORTS WITH RADIOS SHALL BE REQUIRED TO CONTROL VEHICLE TRAFFIC ACROSS ACTIVE AIRFIELD PAVEMENTS. NO CONSTRUCTION PERSONNEL/EQUIPMENT ALLOWED WITHIN THE RUNWAY SAFETY AREA (RSA) OR TAXIWAY SAFETY AREA (TSA) WHEN PAVEMENTS ARE OPEN TO AIRCRAFT TRAFFIC. PAVEMENTS ARE TO BE KEPT FREE OF DEBRIS AT ALL TIMES. ANY DAMAGE TO PAVEMENTS BY THE CONTRACTOR'S FORCES SHALL BE REPAIRED AT NO ADDITIONAL COST TO THE CONTRACT.
2. CONSTRUCTION PERSONNEL WILL BE REQUIRED TO ATTEND AIRFIELD DRIVER SAFETY TRAINING (APPROXIMATELY 1 HOUR) AT THE AIRPORT PRIOR TO BEGINNING CONSTRUCTION ACTIVITIES.

HANSON
Engineering | Planning | Allied Services
Offices Nationwide
www.hanson-inc.com
Hanson Professional Services Inc.
1525 S. 6th Street
Springfield, IL 62703
phone: 217-788-2450
fax: 217-788-2503
Illinois Licensed
Professional Service Corporation
#184-001084

ST. LOUIS DOWNTOWN AIRPORT
Bi-State Development Agency
6100 Archview Drive
Cahokia, IL 62206-1445

EXP 11/30/17
STATE OF ILLINOIS
BARRY S. STOLZ
062-057281
LICENSED PROFESSIONAL ENGINEER
6/9/17

TAXIWAY B RELOCATION, PHASE 1:
FILLET IMPROVEMENTS

SBG No:
3-17-SBGP-133/134
IDA No: CPS-4505

Contract No. SD058

NO.	DATE	DESCRIPTION		
		DES	DWN	REV

ISSUE: JUNE 9, 2017
PROJECT NO: 16A0107
CAD FILE: G-004-SFY.DWG
DESIGN BY: JRH 01/12/2017
DRAWN BY: JRH 01/12/2017
REVIEWED BY: BSS 06/06/17

SHEET TITLE

PROPOSED CONSTRUCTION SAFETY PLAN - WORK AREA 4 (ADD.ALT.1)

LIGHTED RUNWAY CLOSURE MARKER

NOT TO SCALE

NOTES:

1. THE AIRPORT HAS TWO LIGHTED RUNWAY CLOSURE MARKERS AVAILABLE FOR USE ON THIS PROJECT. THE COST OF PLACING, OPERATING, MAINTAINING, AND REMOVING THE LIGHTED RUNWAY CLOSURE MARKERS WILL BE CONSIDERED INCIDENTAL TO THE CONTRACT. THE CONTRACTOR SHALL RETURN THE AIRPORT-OWNED LIGHTED RUNWAY CLOSURE MARKERS IN THE SAME OR BETTER CONDITION THAN AT THE START OF CONSTRUCTION.
2. THE CONTRACTOR SHALL MAKE FREQUENT INSPECTION OF THE LIGHTED CROSSES AND MAKE PROMPT REPAIRS AS NECESSARY.
3. THE CONTRACTOR SHALL BE ON-CALL FOR 24-HOUR EMERGENCY MAINTENANCE WHEN LIGHTED CROSSES ARE BEING USED.
4. THE LIGHTED MARKERS SHALL BE PLACED OVER THE RUNWAY NUMERALS AS SHOWN IN THE PLANS AND AS DIRECTED BY THE ENGINEER.
5. LIGHTED MARKERS SHALL BE SECURED FROM WIND EFFECTS BY THE CONTRACTOR AS RECOMMENDED BY THE MANUFACTURER.
6. THE LIGHTED MARKERS SHALL BE IN PLACE AND OPERATING WHENEVER THE RUNWAY IS CLOSED AND REMOVED WHEN THE RUNWAY IS RE-OPENED.

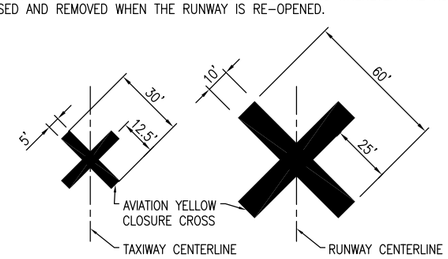

CLOSURE CROSS MARKER DETAIL

NOT TO SCALE

NOTES:

1. TEMPORARY CLOSURE CROSS MARKINGS SHALL BE CONSTRUCTED OF PLYWOOD, SNOW FENCE OR APPROVED FABRIC AND SHALL BE SECURED TO PAVEMENT BY SANDBAGS OR OTHER APPROVED METHOD.
2. COST FOR PROVIDING, PLACING, MAINTAINING, RELOCATING AND REMOVING CLOSURE CROSSES SHALL BE INCLUDED IN THE COST OF THE MOBILIZATION ITEM.

BARRICADE NOTES

1. ALL CONSTRUCTION SIGNS AND TRAFFIC CONTROL DEVICES SHALL CONFORM TO THE MANUAL ON UNIFORM TRAFFIC CONTROL DEVICES INCLUDING THE ILLINOIS SUPPLEMENT (LATEST EDITION) AND THE FAA ADVISORY CIRCULARS (LATEST EDITION) UNLESS NOTED OTHERWISE. THE FAA OR MORE STRINGENT SPECIFICATIONS SHALL GOVERN.
2. BARRICADES SHALL BE SPACED END TO END THE WIDTH OF THE PAVEMENT IN 10' INCREMENTS. BARRICADES ARE TO BE SET BACK 93' FROM THE ACTIVE TAXIWAY CENTERLINE OR AS SHOWN ON THE PLANS.
3. CONSTRUCTION RED WARNING LIGHT: THESE ARE PORTABLE, LENS DIRECTED, ENCLOSED LIGHTS. THE COLOR OF THE LIGHT EMITTED SHALL BE RED. THEY MAY BE USED IN EITHER A STEADY BURN (TYPE C) OR LOW INTENSITY FLASHING MODE (TYPE A) UNLESS NOTED OTHERWISE.
4. THE LIGHTING SHALL BE MAINTAINED IN OPERATION DURING THE HOURS OF DARKNESS BETWEEN 1/2 HOUR AFTER SUNSET AND 1/2 HOUR BEFORE SUNRISE AND WHEN CONDITIONS EXIST WHICH TEND TO OBSCURE VISION.
5. BARRICADES SHALL BE SECURED TO THE GROUND BY APPROVED METHODS TO PREVENT MOVEMENT BY PROP WASH, JET BLAST OR OTHER WIND CURRENTS.
6. THE ONLY COLOR COMBINATION ON BARRICADES IS ORANGE AND WHITE. THE ORANGE STRIPES SHALL BE ENCAPSULATED LENS REFLECTIVE SHEETING. THE WHITE STRIPES SHALL BE EITHER ENCAPSULATED OR ENCLOSED LENS REFLECTIVE SHEETING AND MUST BE IN ACCEPTABLE CONDITION.
7. COST FOR PROVIDING, PLACING, MAINTAINING, RELOCATING AND REMOVING BARRICADES SHALL BE INCLUDED IN THE COST OF THE MOBILIZATION ITEM.

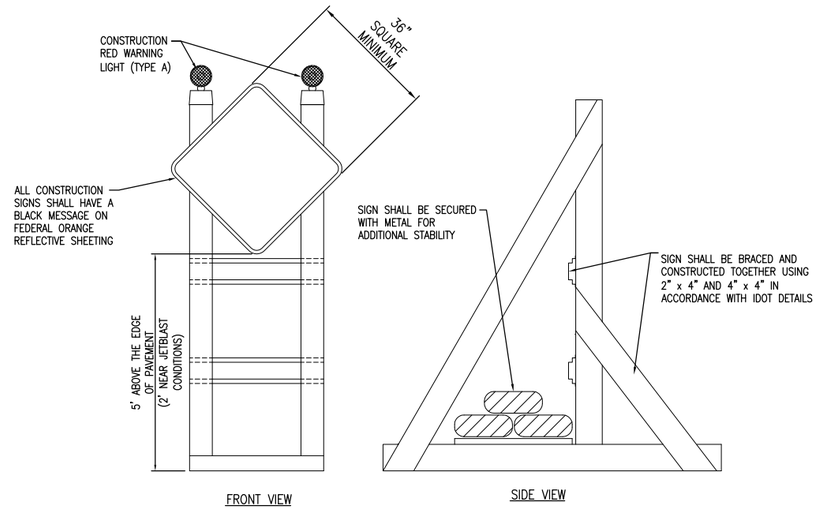

SIGNAGE NOTES

1. ALL CONSTRUCTION SIGNS AND TRAFFIC CONTROL DEVICES SHALL CONFORM TO THE MANUAL ON UNIFORM TRAFFIC CONTROL DEVICES INCLUDING THE ILLINOIS SUPPLEMENT (LATEST EDITION) AND THE FAA ADVISORY CIRCULARS (LATEST EDITION) UNLESS NOTED OTHERWISE. THE FAA OR MORE STRINGENT SPECIFICATIONS SHALL GOVERN.
2. UNLESS OTHERWISE SPECIFIED, CONSTRUCTION SIGNS SHALL BE MOUNTED ON PORTABLE OR NON-PORTABLE SUPPORTS. A PORTABLE SUPPORT IS DEFINED AS A TYPICAL SIGN STANDARD AS SHOWN ON THIS SHEET, OR A SMALL LIGHT WEIGHT TRAILER. A NON-PORTABLE SUPPORT IS DEFINED AS DRIVEN METAL OR WOOD POST. ALL SIGNS, REGARDLESS OF THE TYPE OF SUPPORTS USED, SHALL BE MOUNTED SUCH THAT THE MESSAGE ON THE SIGN IS LEVEL IN THE HORIZONTAL PLANE AFTER PLACEMENT. THE COST OF CONSTRUCTION WARNING LIGHTS SHALL BE INCLUDED IN THE COST OF THE CONSTRUCTION SIGNS.
3. CONSTRUCTION RED WARNING LIGHT: THESE ARE PORTABLE, LENS DIRECTED, ENCLOSED LIGHTS. THE COLOR OF THE LIGHT EMITTED SHALL BE RED. THEY ARE TO BE USED IN A LOW INTENSITY FLASHING MODE (TYPE A).
4. THE LIGHTING SHALL BE MAINTAINED IN OPERATION DURING THE HOURS OF DARKNESS BETWEEN 1/2 HOUR AFTER SUNSET AND 1/2 HOUR BEFORE SUNRISE AND WHEN CONDITIONS EXIST WHICH TEND TO OBSCURE VISION.
5. COST FOR PROVIDING, PLACING, MAINTAINING, AND REMOVING SIGNS SHALL BE INCLUDED IN ITEM AR150540 HAUL ROUTE.

W20-3 48" x 48" (A) W20-3 48" x 48" (B) W20-3 48" x 48" (C)

CONSTRUCTION SIGNS

NOT TO SCALE

SAFETY NOTES

1. FOLLOWING ARE THE CONSTRUCTION SAFETY PROCEDURES THAT THE CONTRACTOR SHALL FOLLOW THROUGHOUT THIS PROJECT. ADDITIONAL REQUIREMENTS ARE SHOWN ON THE CONSTRUCTION SAFETY AND PHASING PLAN SHEET AND THIS SHEET.
2. ALL PROVISIONS OF THE LATEST EDITION OF FAA ADVISORY CIRCULAR AC 150/5370-2 (CURRENT EDITION), "OPERATIONAL SAFETY ON AIRPORTS DURING CONSTRUCTION", APPLY TO THIS CONTRACT, EXCEPT AS MODIFIED BY THIS SAFETY PLAN, OR AS MODIFIED BY THE OWNER THROUGH THE RESIDENT ENGINEER/TECHNICIAN AT THE PRECONSTRUCTION CONFERENCE, OR DURING THE COURSE OF THE CONTRACT.
3. THE CONTRACTORS SHALL MINIMIZE DISRUPTION OF STANDARD OPERATING PROCEDURES FOR AERONAUTICAL ACTIVITY BY REMAINING WITHIN THE PRESCRIBED STAGING, CONSTRUCTION, AND PHASING AREAS PRESENTED ON THE CONSTRUCTION SAFETY AND PHASING PLAN SHEETS.
4. NO UNAUTHORIZED PERSONNEL SHALL ENTER ANY AREA OF THE AIRPORT THAT COULD POTENTIALLY BE HAZARDOUS. THE AIRPORT MANAGER RESERVES THE RIGHT TO SUSPEND OPERATIONS IN ORDER TO MAINTAIN SAFETY AT THE AIRPORT.
5. CONTRACTOR EQUIPMENT, VEHICLES, AND PROJECT MATERIALS SHALL BE STORED AT THE STAGING AREA SHOWN ON THE PLAN VIEW, EXCEPT AS OTHERWISE PROVIDED FOR AT THE PRECONSTRUCTION CONFERENCE.
6. ALL CONSTRUCTION EQUIPMENT OPERATING IN THE PRESCRIBED CONSTRUCTION AREA IS REQUIRED TO DISPLAY A CHECKERBOARD FLAG PROPERLY LOCATED OR A ROTATING BEACON (STROBE) AS SPECIFIED IN AC 150/5210-5, "PAINTING, MARKING, AND LIGHTING OF VEHICLES USED ON AN AIRPORT" LATEST EDITION.
7. NO CONSTRUCTION MATERIAL STOCKPILES SHALL BE LOCATED WITHIN 250' OF ANY ACTIVE RUNWAY, WITHIN 93' OF ANY OTHER ACTIVE AIRPORT OPERATIONS AREA, OR PENETRATE A PART 77 IMAGINARY SURFACE (PROVIDED BY THE RESIDENT ENGINEER/TECHNICIAN) EXTENDING OUT AND UPWARDS FROM ALL SIDES OF AN ACTIVE RUNWAY.
8. CLOSED AIRFIELD PHASING AREAS, OPEN TRENCHES, AND STOCKPILED MATERIALS AT THE CONSTRUCTION SITE SHALL BE PROMINENTLY MARKED WITH LIGHTED BARRICADES WITH STEADY BURNING OR FLASHING RED LIGHTS AS SPECIFIED IN 150/5370-2, "OPERATIONAL SAFETY ON AIRPORT DURING CONSTRUCTION, LATEST EDITION. LIGHTED BARRICADES MUST BE NO TALLER THAN 18" (EXCLUSIVE OF SUPPLEMENTARY LIGHTS AND FLAGS) ON THE TAXIWAYS AND COMPLY WITH ADVISORY CIRCULAR 150/5370-2, LATEST EDITION. CONTRACTOR SHALL NIGHT CHECK BARRICADES DAILY FOR PROPER OPERATION.
9. NO OPEN TRENCHES WITHIN 250' OF AN ACTIVE RUNWAY CENTERLINE OR WITHIN 93' OF ANY AIRPORT OPERATIONS AREA WILL BE PERMITTED UNLESS PROPERLY MARKED. OTHER TRENCHES SHALL BE MAINTAINED SAFE, I.E., BARRICADED OR COVERED WITH STEEL PLATES IN ALL OTHER AREAS.
10. OPEN TRENCHES, EXCAVATIONS, AND STOCKPILED MATERIALS AT THE CONSTRUCTION SITE SHOULD BE PROMINENTLY MARKED WITH ORANGE FLAGS AND LIGHTED WITH FLASHING RED LIGHTS DURING HOURS OF RESTRICTED VISIBILITY AND/OR DARKNESS.
11. NO CONSTRUCTION EQUIPMENT GREATER THAN 25' TALL WILL BE PERMITTED ON THE AIRPORT. HOWEVER OTHER EQUIPMENT TALLER THAN 25' MAY BE PERMITTED WITH THE APPROVAL OF THE AIRPORT MANAGER AND AIRSPACE APPROVAL BY THE FAA.
12. NO OPEN FLAME WELDING OR TORCH CUTTING OPERATION IS PERMITTED UNLESS ADEQUATE FIRE AND SAFETY PRECAUTIONS ARE PROVIDED AND HAVE BEEN APPROVED BY THE AIRPORT MANAGER NO FLARE POTS ARE ALLOWED ON THE PROJECT.
13. SOIL, DEBRIS, AND LOOSE MATERIAL DROPPED OR TRUCKED ONTO AIRPORT ROADS, TAXIWAYS, AND SOD SURFACES, OR WHICH CAN BE BLOWN ONTO SUCH SURFACES, SHALL BE IMMEDIATELY SWEPT, PICKED UP AND REMOVED, OR PLACED INTO CLOSED CONTAINERS. ANY DAMAGE TO AIRPORT PROPERTY SHALL BE REPAIRED IMMEDIATELY AT NO COST TO THE OWNER.
14. EACH CONTRACTOR SHALL BE RESPONSIBLE FOR LOCATING AND MAINTAINING AIRPORT LIGHTING AND NAVIGATIONAL ELECTRICAL SYSTEMS DURING CONSTRUCTION. A CONTACT PERSON AND TELEPHONE NUMBER FOR 24 HOUR EMERGENCY IMMEDIATE REPAIR SHALL BE SUBMITTED TO THE AIRPORT MANAGER AND RESIDENT ENGINEER/TECHNICIAN. HAUL ROUTES CROSSING PAVEMENT, DRAINAGE, MISCELLANEOUS. STRUCTURES AND/OR AIRFIELD CABLES SHALL BE PROTECTED FROM DAMAGE.
15. ALL AIRCRAFT AND AIRPORT OPERATIONS HAVE THE RIGHT-OF-WAY. CONTRACTOR TO YIELD TO VEHICLES AND REMAIN CLEAR AT ALL TIMES.
16. CONTRACTOR SHALL PLACE, SECURE, AND MAINTAIN LIGHTED BARRICADES AND CLOSURE CROSSES WHEN A RUNWAY/TAXIWAY/APRON IS CLOSED OR AS REQUIRED BY THE PLANS AND DESIGNATED BY THE RESIDENT ENGINEER/TECHNICIAN.
17. CONTRACTOR SHALL MARK HAZARDOUS AREA WITH STEADY-BURNING OR FLASHING RED LIGHTS DURING PERIODS OF LOW VISIBILITY AS REQUIRED.
18. THE CONTRACTOR SHALL PERIODICALLY PERFORM ONSITE INSPECTIONS THROUGHOUT THE DURATION OF THE PROJECT WITH THE IMMEDIATE REMEDY OF ANY DIFFERENCES, WHETHER CAUSED BY NEGLIGENCE, OVERSIGHT, OR PROJECT SCOPE CHANGE.
19. CONTRACTOR SHALL MOVE MAINTENANCE OF TRAFFIC COMPONENTS AT THE WRITTEN DIRECTION OF THE RESIDENT ENGINEER/TECHNICIAN AT NO ADDITIONAL COST.
20. CONTRACTOR SHALL NOT REMOVE THE BARRICADES WITHOUT THE APPROVAL BY THE RESIDENT ENGINEER/TECHNICIAN.
21. CONTRACTOR SHALL MAINTAIN FLASHERS, SIGNS AND/OR BARRICADES AS REQUIRED BY THE PLANS, CITY OR COUNTY REGULATIONS OR CONTRACTOR ACTIVITIES. CONTRACTOR SHALL OBTAIN ANY AND ALL REQUIRED LOCAL PERMITS UNLESS SPECIFIED OTHERWISE.
22. THE CONTRACTOR SHALL UTILIZE WATER AND/OR CHEMICALS APPROVED BY THE RESIDENT ENGINEER/TECHNICIAN AS NECESSARY TO CONTROL DUST.
23. NO CONSTRUCTION VEHICLES SHALL BE DRIVEN ACROSS ANY ACTIVE RUNWAY, INCLUDING TURF RUNWAYS. CONSTRUCTION EQUIPMENT OR CONSTRUCTION ACTIVITY WILL NOT BE PERMITTED WITHIN 250' OF ANY ACTIVE RUNWAY CENTERLINE (150' FOR RUNWAY 5-23) OR WITHIN 93' OF ANY OTHER ACTIVE AIRPORT TAXIWAY OR APRON. HOWEVER, CONSTRUCTION MAY BE PERMITTED IN THESE AREAS IF THE CONTRACTOR HAS GAINED APPROVAL FROM THE AIRPORT MANAGER AT LEAST 7 DAYS IN ADVANCE OF THE SCHEDULED CONSTRUCTION PERIOD AND THE OPERATIONAL AREA IS CLOSED TO TRAFFIC AND PROPER NOTAMS ARE ISSUED BY THE AIRPORT MANAGER TO THE APPROPRIATE FLIGHT SERVICE STATION.
24. UNLESS SPECIFIED OTHERWISE, COST FOR THE ABOVE IS TO BE CONSIDERED INCIDENTAL TO THE PROJECT. SEPARATE PAYMENT SHALL NOT BE MADE.

HANSON
Engineering | Planning | Allied Services

Offices Nationwide
www.hanson-inc.com

Hanson Professional Services Inc.
1525 S. 6th Street
Springfield, IL 62703
phone: 217-788-2450
fax: 217-788-2503

Illinois Licensed
Professional Service Corporation
#184-001084

ST. LOUIS DOWNTOWN AIRPORT
Bi-State Development Agency
6100 Archview Drive
Cahokia, IL 62206-1445

EXP 11/30/17 STATE OF ILLINOIS BARRY S. STOLZ 062-057281 LICENSED PROFESSIONAL ENGINEER 6/9/17

TAXIWAY B RELOCATION, PHASE 1: FILLET IMPROVEMENTS

SBG No: 3-17-SBGP-133/134
IDA No: CPS-4505

Contract No. SD058

NO.	DATE	DESCRIPTION		
		DES	DWN	REV

ISSUE: JUNE 9, 2017
PROJECT NO: 16A0107
CAD FILE: G-501-SFY.DWG
DESIGN BY: JRH 03/20/17
DRAWN BY: JRH 03/20/17
REVIEWED BY: BSS 06/06/17

SHEET TITLE

CONSTRUCTION SAFETY DETAILS AND NOTES

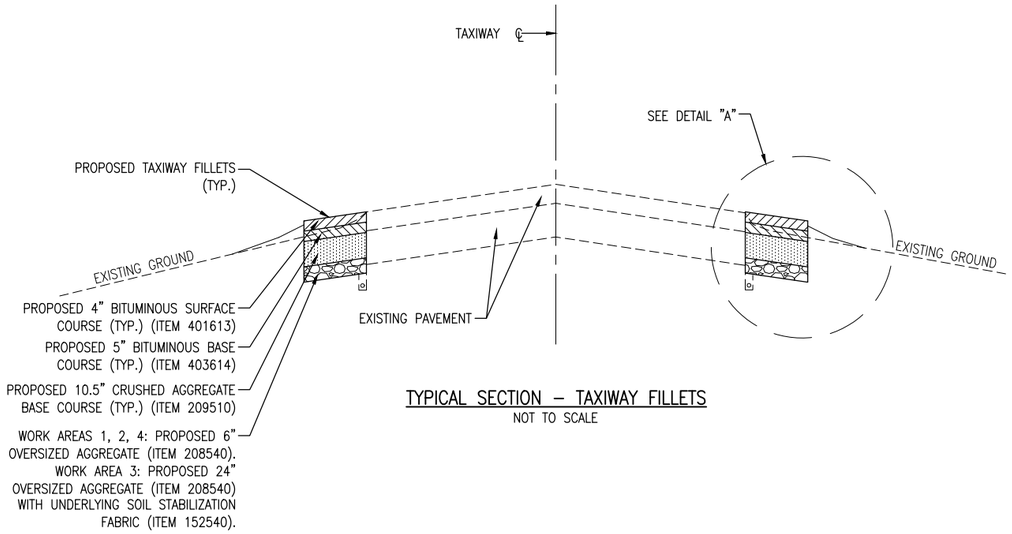

TYPICAL SECTION – TAXIWAY FILLETS

NOT TO SCALE

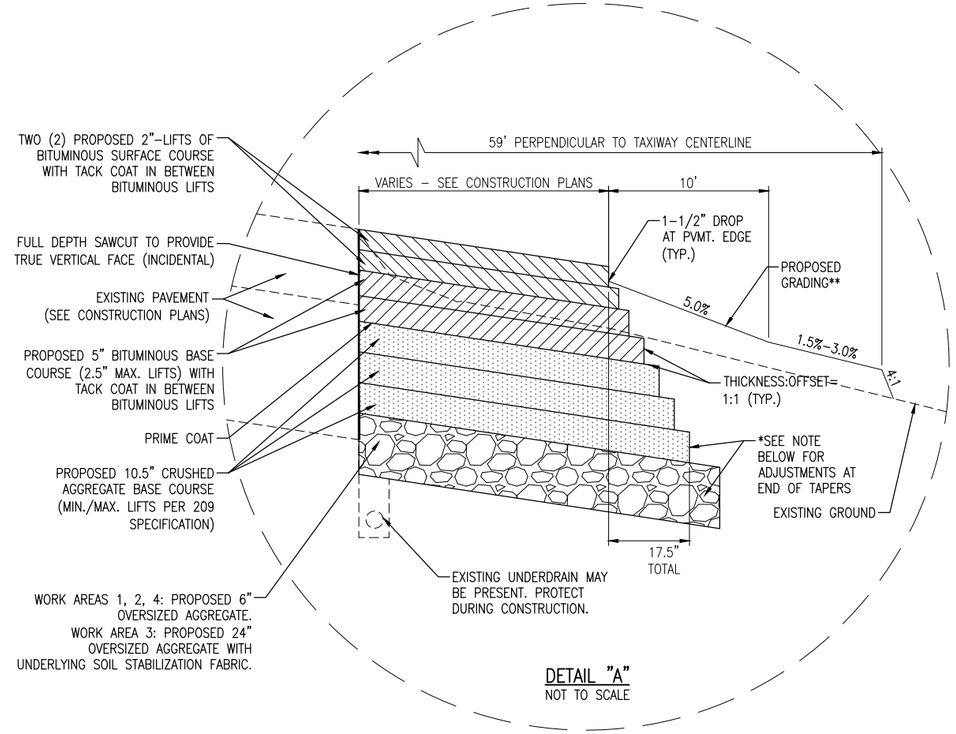

DETAIL "A"

NOT TO SCALE

* FIRST LIFT OF PROPOSED BITUMINOUS BASE COURSE (BOTTOM 3") SHALL BE CONSTRUCTED AT 3' MINIMUM WIDTH AS SHOWN BELOW.

** EXTENTS OF PROPOSED GRADING WILL VARY BASED ON LOCATION AND EXISTING GRADES. SEE PROPOSED GRADING LIMITS ON GRADING PLAN SHEETS.

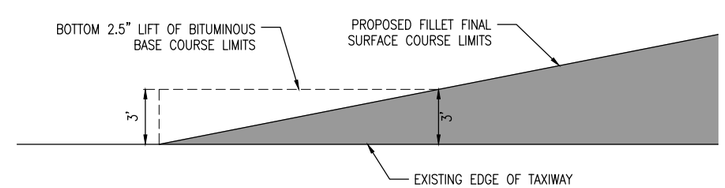

PLAN VIEW – SECTION LIMITS

NOT TO SCALE

NOTE: PAY ITEM QUANTITIES FOR BITUMINOUS BASE COURSE INCLUDES AN ADDITIONAL 3' WIDTH FOR THE BOTTOM 2.5" LIFT ONLY AS SHOWN IN THIS DETAIL. ANY ADDITIONAL WIDTH OF PAVEMENT, OTHER THAN WHAT IS SHOWN ABOVE, SHALL BE AT THE CONTRACTOR'S EXPENSE.

HANSON
Engineering | Planning | Allied Services

Offices Nationwide
www.hanson-inc.com

Hanson Professional Services Inc.
1525 S. 6th Street
Springfield, IL 62703
phone: 217-788-2450
fax: 217-788-2503

Illinois Licensed
Professional Service Corporation
#184-001084

ST. LOUIS
DOWNTOWN AIRPORT
Bi-State Development Agency
6100 Archview Drive
Cahokia, IL 62206-1445

EXP 11/30/17
STATE OF ILLINOIS
BARRY S. STOLZ
062-057281
LICENSED
PROFESSIONAL ENGINEER
6/9/17

TAXIWAY B RELOCATION, PHASE 1:
FILLET IMPROVEMENTS

SBG No:
3-17-SBGP-133/134
IDA No: CPS-4505

Contract No. SD058

NO.	DATE	DESCRIPTION		
		DES	DWN	REV

ISSUE: JUNE 9, 2017
PROJECT NO: 16A0107
CAD FILE: C-300-TYP.DWG
DESIGN BY: JRH 03/20/2017
DRAWN BY: JRH 03/20/2017
REVIEWED BY: BSS 06/06/17

SHEET TITLE

PROPOSED TYPICAL SECTIONS

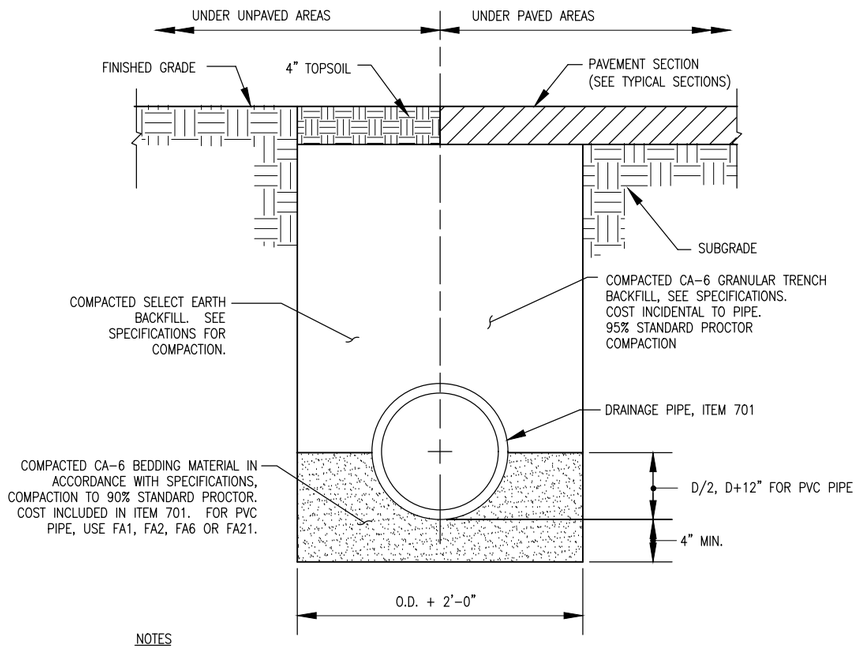

NOTES

1. UNSUITABLE MATERIAL ENCOUNTERED DURING PLACEMENT OF BEDDING SHALL BE REMOVED AND REPLACED.
2. WITHIN 3 FEET OF PAVED AREA, GRANULAR BACKFILL IS TO BE USED INSTEAD OF EARTH BACKFILL.
3. AT CONTRACTOR'S OPTION IDOT CONTROLLED LOW STRENGTH MATERIAL WITH A HIGH EARLY STRENGTH, "FLASH FILL", MAY BE USED INSTEAD OF GRANULAR TRENCH BACKFILL UNDER PAVEMENTS AT NO ADDITIONAL COST TO THE CONTRACT.

PIPE TRENCH DETAIL

NOT TO SCALE

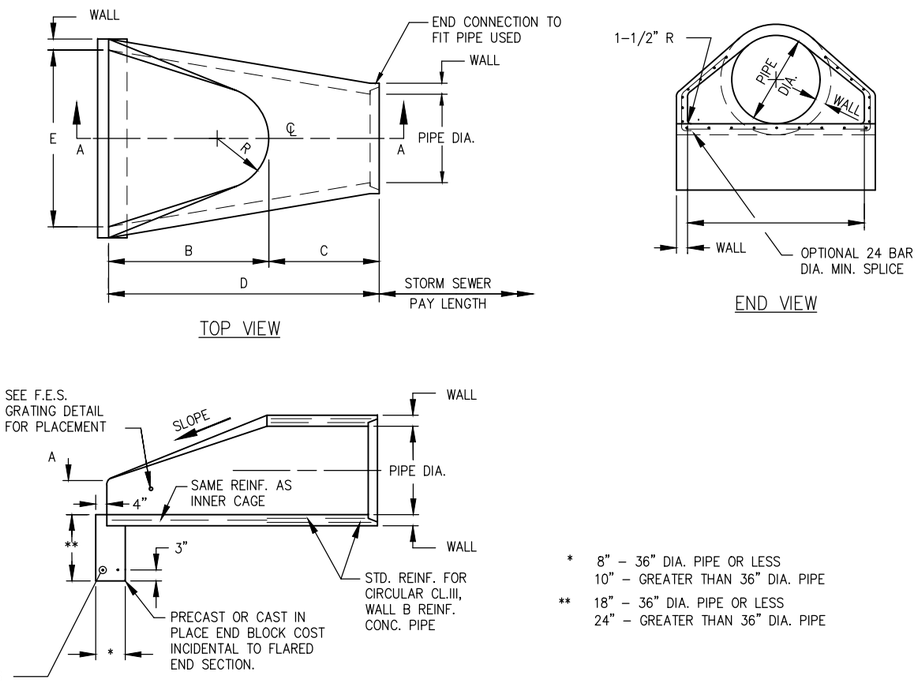

* 8" – 36" DIA. PIPE OR LESS
10" – GREATER THAN 36" DIA. PIPE

** 18" – 36" DIA. PIPE OR LESS
24" – GREATER THAN 36" DIA. PIPE

PIPE DIA.	WALL	A	B	C	D	E	R	SLOPE
24"	3"	9.5"	3'-7.5"	30"	6'-1.5"	4'-0"	*	1:2.5

* RADIUS AS FURNISHED BY MANUFACTURER

PRECAST CONCRETE FLARED END SECTION

(IDOT STANDARD 542301-MODIFIED)

NOT TO SCALE

HANSON
Engineering | Planning | Allied Services

Offices Nationwide
www.hanson-inc.com

Hanson Professional Services Inc.
1525 S. 6th Street
Springfield, IL 62703
phone: 217-788-2450
fax: 217-788-2503

Illinois Licensed
Professional Service Corporation
#184-001084

ST. LOUIS DOWNTOWN AIRPORT

Bi-State Development Agency
6100 Archview Drive
Cahokia, IL 62206-1445

EXP 11/30/17
STATE OF ILLINOIS
BARRY S. STOLZ
062-057281
LICENSED PROFESSIONAL ENGINEER
6/9/17

TAXIWAY B RELOCATION, PHASE 1:
FILLET IMPROVEMENTS

SBG No:
3-17-SBGP-133/134
IDA No: CPS-4505

Contract No. SD058

NO.	DATE	DESCRIPTION		
		DES	DWN	REV

ISSUE: JUNE 9, 2017
PROJECT NO: 16A0107
CAD FILE: C-501-DRN.DWG
DESIGN BY: JRH 03/20/2017
DRAWN BY: JRH 03/20/2017
REVIEWED BY: BSS 06/06/17

SHEET TITLE

PROPOSED DRAINAGE DETAILS

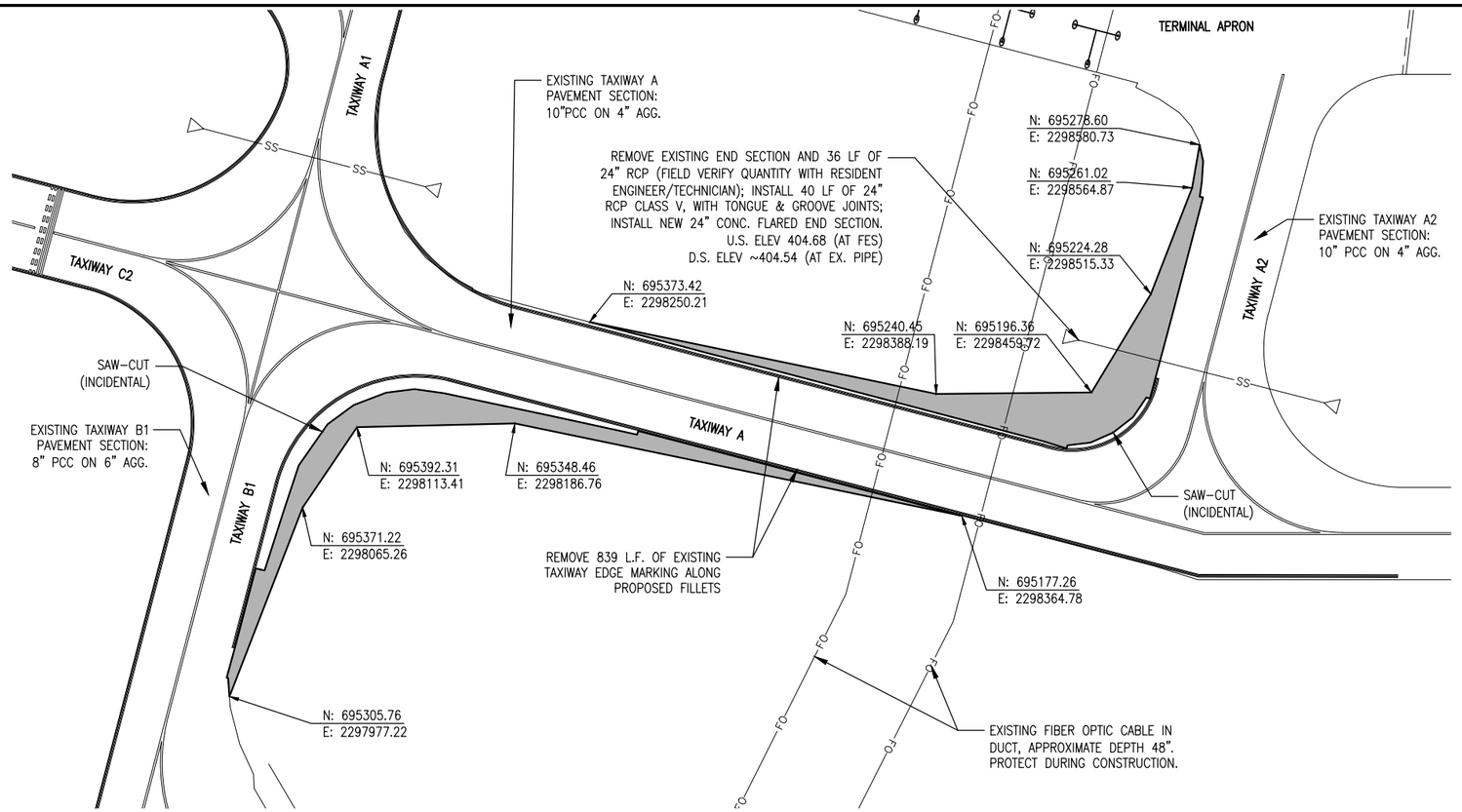

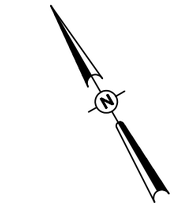

LEGEND

- EXISTING PAVEMENT
- PROPOSED PAVEMENT

NOTE: SEE EXISTING AND PROPOSED ELECTRICAL PLAN SHEETS FOR ADDITIONAL WORK ITEMS.

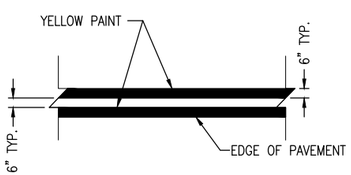

EXISTING TAXIWAY EDGE STRIPE (FOR REFERENCE)

NOT TO SCALE

HANSON
Engineering | Planning | Allied Services

Offices Nationwide
www.hanson-inc.com

Hanson Professional Services Inc.
1525 S. 6th Street
Springfield, IL 62703
phone: 217-788-2450
fax: 217-788-2503

Illinois Licensed
Professional Service Corporation
#184-001084

ST. LOUIS DOWNTOWN AIRPORT
Bi-State Development Agency
6100 Archview Drive
Cahokia, IL 62206-1445

EXP 11/30/17
STATE OF ILLINOIS
BARRY S. STOLZ
062-057281
LICENSED PROFESSIONAL ENGINEER
6/9/17

TAXIWAY B RELOCATION, PHASE 1:
FILLET IMPROVEMENTS

SBG No:
3-17-SBGP-133/134
IDA No: CPS-4505

Contract No. SD058

NO.	DATE	DESCRIPTION		
		DES	DWN	REV

ISSUE: JUNE 9, 2017
PROJECT NO: 16A0107
CAD FILE: C-121-CON.DWG
DESIGN BY: JRH 03/20/17
DRAWN BY: JRH 03/20/17
REVIEWED BY: BSS 06/06/17

SHEET TITLE

PROPOSED CONSTRUCTION PLAN - AREA 1

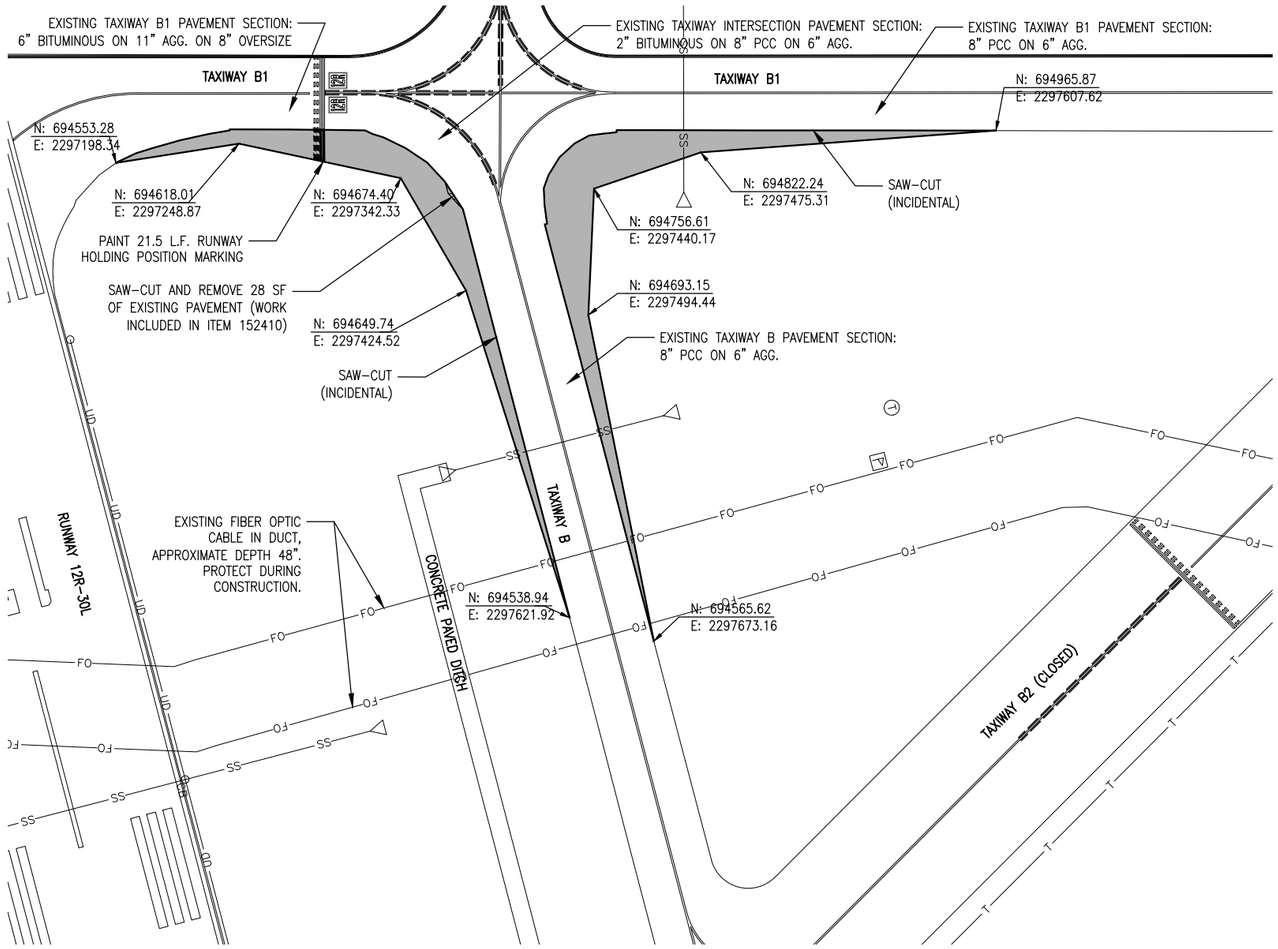

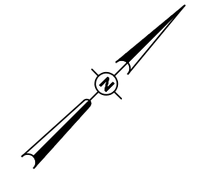

0' 25' 50' 100'

HALF SIZE SCALE: 1"= 100'
FULL SIZE SCALE: 1"= 50'

LEGEND

EXISTING PAVEMENT

PROPOSED PAVEMENT

NOTE: SEE EXISTING AND PROPOSED ELECTRICAL PLAN SHEETS FOR ADDITIONAL WORK ITEMS.

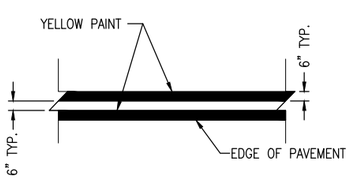

EXISTING TAXIWAY EDGE STRIPE
(FOR REFERENCE)
NOT TO SCALE

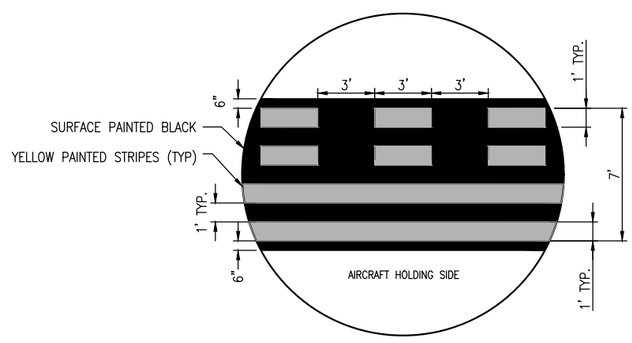

RUNWAY HOLDING POSITION DETAIL
NOT TO SCALE

620-PAVEMENT MARKING-WATERBORNE NOTES

1. THE PAVEMENT MARKING-WATERBORNE (620) SHALL BE PLACED IN ACCORDANCE WITH ITEM 620 "PAVEMENT MARKING" AS STATED ON PAGE 272 OF THE ILLINOIS STANDARD SPECIFICATIONS FOR CONSTRUCTION OF AIRPORTS, ADOPTED APRIL 1, 2012.
2. THIS ITEM SHALL CONSIST OF RUNWAY HOLDING POSITION MARKING IN ACCORDANCE WITH THESE SPECIFICATIONS AND AT THE LOCATIONS SHOWN ON THE CONSTRUCTION PLANS. ALL MARKING WILL BE YELLOW AND BLACK IN COLOR. THE PROPOSED PAVEMENT MARKING WILL BE APPLIED IN TWO APPLICATIONS.
3. ANY MATERIAL DELIVERED THAT FAILS TO MEET THE SPECIFICATIONS SHALL BE DISPOSED OF BY THE VENDOR AND IMMEDIATELY REPLACED WITH ACCEPTABLE MATERIAL ENTIRELY AT THE VENDOR'S EXPENSE, INCLUDING HANDLING AND TRANSPORTATION CHARGES.
4. IF THE CONTRACTOR ELECTS TO "BLOCK PAINT" THE BLACK PAINT AND THEN PAINT YELLOW PAINT OVER THE BLACK PAINT, ONLY THE VISIBLE BLACK PER THE DETAIL WILL BE ELIGIBLE FOR PAYMENT.
5. CUT-OFF SHEETS WILL BE REQUIRED TO INSURE STRAIGHT EDGES.
6. THE PROPOSED MARKING WILL BE PAID FOR UNDER ITEM:
   AR620520 PAVEMENT MARKING-WATERBORNE ___ PER S.F.
   AR620525 PAVEMENT MARKING-BLACK BORDER ___ PER S.F.

HANSON
Engineering | Planning | Allied Services

Offices Nationwide
www.hanson-inc.com

Hanson Professional Services Inc.
1525 S. 6th Street
Springfield, IL 62703
phone: 217-788-2450
fax: 217-788-2503

Illinois Licensed
Professional Service Corporation
#184-001084

ST. LOUIS
DOWNTOWN AIRPORT
Bi-State Development Agency
6100 Archview Drive
Cahokia, IL 62206-1445

EXP 11/30/17
STATE OF ILLINOIS
BARRY S. STOLZ
062-057231
LICENSED PROFESSIONAL ENGINEER
6/9/17

TAXIWAY B RELOCATION,
PHASE 1:
FILLET IMPROVEMENTS

SBG No:
3-17-SBGP-133/134
IDA No: CPS-4505

Contract No. SD058

NO.	DATE	DESCRIPTION		
		DES	DWN	REV

ISSUE: JUNE 9, 2017
PROJECT NO: 16A0107
CAD FILE: C-121-CON.DWG
DESIGN BY: JRH 03/20/17
DRAWN BY: JRH 03/20/17
REVIEWED BY: BSS 06/06/17

SHEET TITLE

PROPOSED
CONSTRUCTION
PLAN - AREA 2

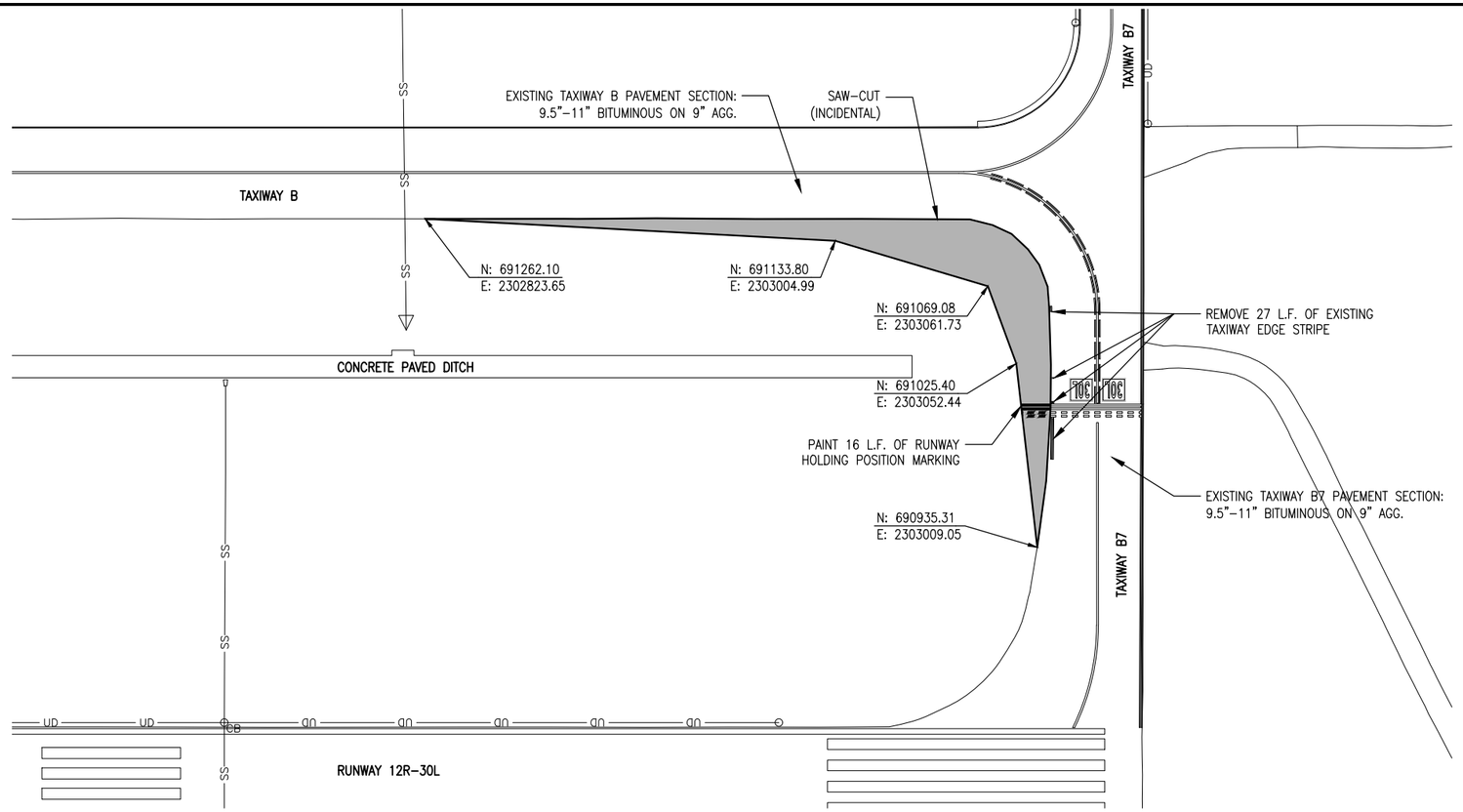

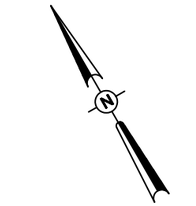

0' 20' 40' 80'

HALF SIZE SCALE: 1"= 80'
FULL SIZE SCALE: 1"= 40'

LEGEND

EXISTING PAVEMENT

PROPOSED PAVEMENT

NOTE: SEE EXISTING AND PROPOSED ELECTRICAL PLAN SHEETS FOR ADDITIONAL WORK ITEMS.

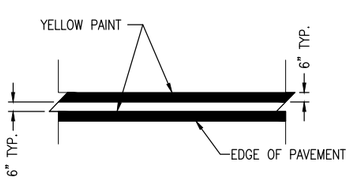

EXISTING TAXIWAY EDGE STRIPE
(FOR REFERENCE)
NOT TO SCALE

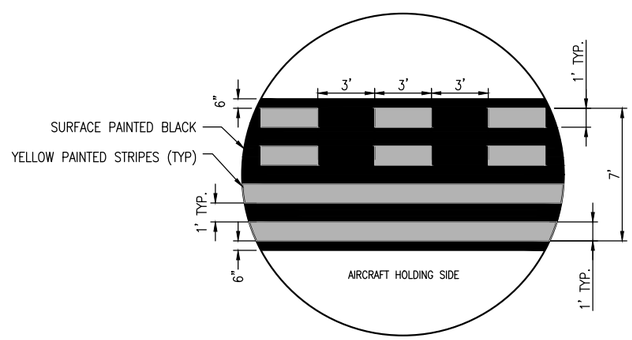

RUNWAY HOLDING POSITION DETAIL
NOT TO SCALE

620–PAVEMENT MARKING–WATERBORNE NOTES

1. THE PAVEMENT MARKING–WATERBORNE (620) SHALL BE PLACED IN ACCORDANCE WITH ITEM 620 "PAVEMENT MARKING" AS STATED ON PAGE 272 OF THE ILLINOIS STANDARD SPECIFICATIONS FOR CONSTRUCTION OF AIRPORTS, ADOPTED APRIL 1, 2012.
2. THIS ITEM SHALL CONSIST OF RUNWAY HOLDING POSITION MARKING IN ACCORDANCE WITH THESE SPECIFICATIONS AND AT THE LOCATIONS SHOWN ON THE CONSTRUCTION PLANS. ALL MARKING WILL BE YELLOW AND BLACK IN COLOR. THE PROPOSED PAVEMENT MARKING WILL BE APPLIED IN TWO APPLICATIONS.
3. ANY MATERIAL DELIVERED THAT FAILS TO MEET THE SPECIFICATIONS SHALL BE DISPOSED OF BY THE VENDOR AND IMMEDIATELY REPLACED WITH ACCEPTABLE MATERIAL ENTIRELY AT THE VENDOR'S EXPENSE, INCLUDING HANDLING AND TRANSPORTATION CHARGES.
4. IF THE CONTRACTOR ELECTS TO "BLOCK PAINT" THE BLACK PAINT AND THEN PAINT YELLOW PAINT OVER THE BLACK PAINT, ONLY THE VISIBLE BLACK PER THE DETAIL WILL BE ELIGIBLE FOR PAYMENT.
5. CUT–OFF SHEETS WILL BE REQUIRED TO INSURE STRAIGHT EDGES.
6. THE PROPOSED MARKING WILL BE PAID FOR UNDER ITEM:
   AR620520 PAVEMENT MARKING–WATERBORNE ___ PER S.F.
   AR620525 PAVEMENT MARKING–BLACK BORDER ___ PER S.F.

HANSON
Engineering | Planning | Allied Services

Offices Nationwide
www.hanson-inc.com

Hanson Professional Services Inc.
1525 S. 6th Street
Springfield, IL 62703
phone: 217-788-2450
fax: 217-788-2503

Illinois Licensed
Professional Service Corporation
#184-001084

ST. LOUIS
DOWNTOWN AIRPORT
Bi-State Development Agency
6100 Archview Drive
Cahokia, IL 62206-1445

EXP 11/30/17
STATE OF ILLINOIS
BARRY S. STOLZ
062-057281
LICENSED
PROFESSIONAL ENGINEER
6/9/17

TAXIWAY B RELOCATION,
PHASE 1:
FILLET IMPROVEMENTS

SBG No:
3-17-SBGP-133/134
IDA No: CPS-4505

Contract No. SD058

NO.	DATE	DESCRIPTION		
		DES	DWN	REV

ISSUE: JUNE 9, 2017
PROJECT NO: 16A0107
CAD FILE: C-121-CON.DWG
DESIGN BY: JRH 03/20/17
DRAWN BY: JRH 03/20/17
REVIEWED BY: BSS 06/06/17

SHEET TITLE

PROPOSED
CONSTRUCTION
PLAN - AREA 3

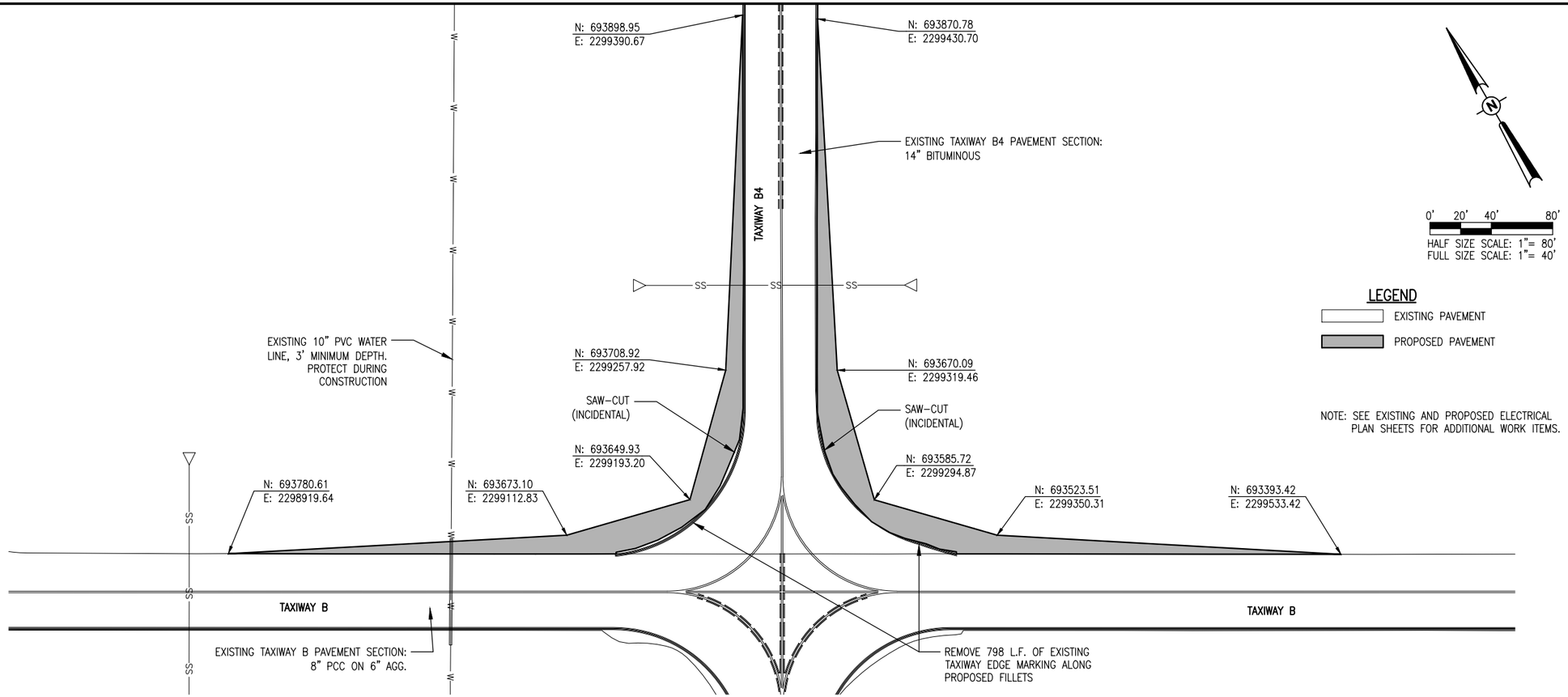

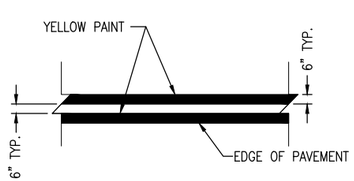

EXISTING TAXIWAY EDGE STRIPE
(FOR REFERENCE)
NOT TO SCALE

HANSON
Engineering | Planning | Allied Services

Offices Nationwide
www.hanson-inc.com

Hanson Professional Services Inc.
1525 S. 6th Street
Springfield, IL 62703
phone: 217-788-2450
fax: 217-788-2503

Illinois Licensed
Professional Service Corporation
#184-001084

ST. LOUIS
DOWNTOWN AIRPORT

Bi-State Development Agency
6100 Archview Drive
Cahokia, IL 62206-1445

EXP 11/30/17
STATE OF ILLINOIS
BARRY S. STOLZ
062-057281
LICENSED PROFESSIONAL ENGINEER
6/9/17

TAXIWAY B RELOCATION, PHASE 1:
FILLET IMPROVEMENTS

SBG No:
3-17-SBGP-133/134
IDA No: CPS-4505

Contract No. SD058

NO.	DATE	DESCRIPTION		
		DES	DWN	REV

ISSUE: JUNE 9, 2017
PROJECT NO: 16A0107
CAD FILE: C-121-CON.DWG
DESIGN BY: JRH 03/20/17
DRAWN BY: JRH 03/20/17
REVIEWED BY: BSS 06/06/17

SHEET TITLE

PROPOSED CONSTRUCTION PLAN - AREA 4 (ADD.ALT.1)

JUN 09, 2017 1:10 PM HERND01562
I:\16JOBS\16A0107\16A0107D\CAD\AIRPORT\SHEET\C-121-CON.DWG

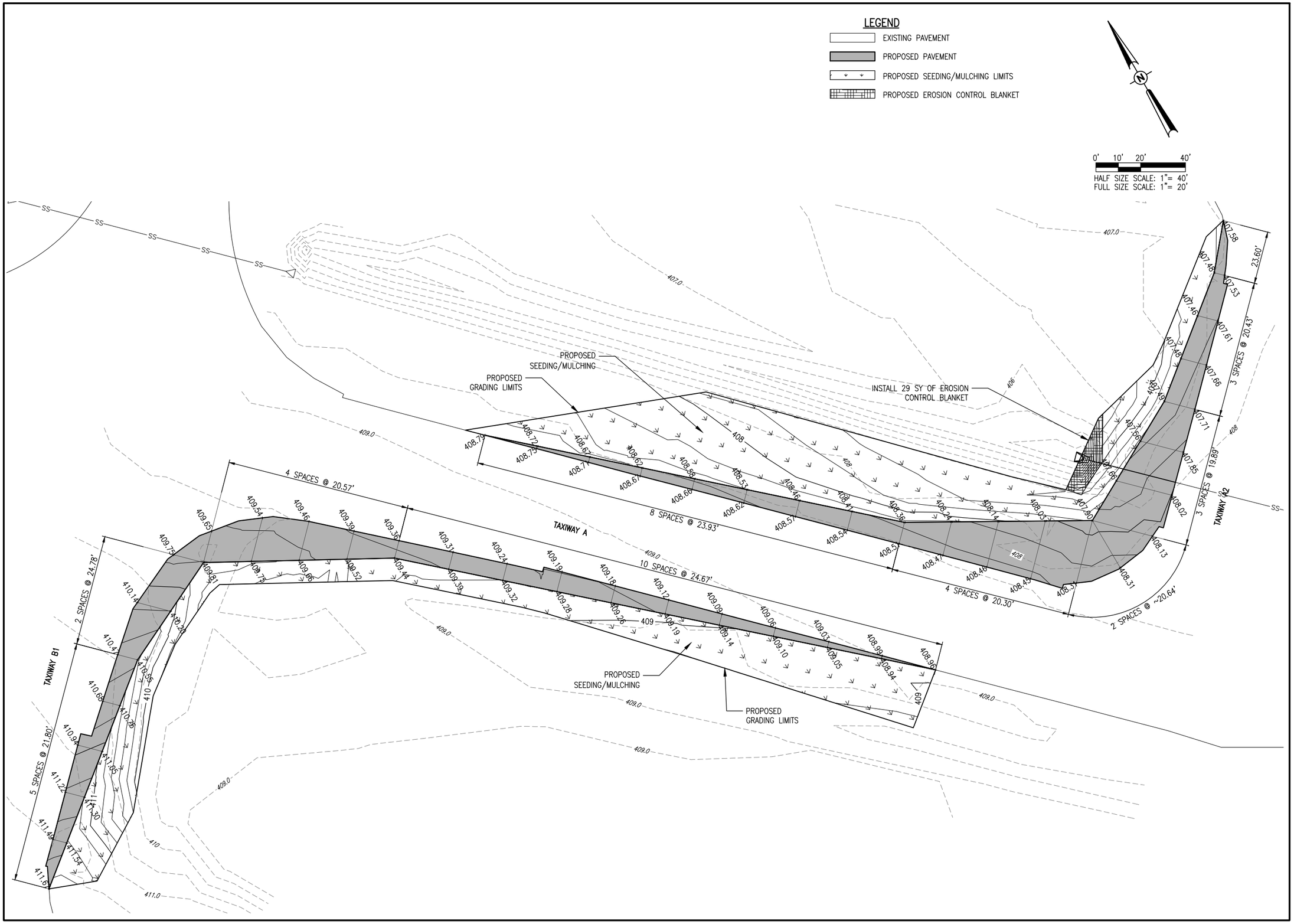

HANSON
Engineering | Planning | Allied Services

Offices Nationwide
www.hanson-inc.com

Hanson Professional Services Inc.
1525 S. 6th Street
Springfield, IL 62703
phone: 217-788-2450
fax: 217-788-2503

Illinois Licensed
Professional Service Corporation
#184-001084

ST. LOUIS
DOWNTOWN AIRPORT

Bi-State Development Agency
6100 Archview Drive
Cahokia, IL 62206-1445

Exp 11/30/17
STATE OF ILLINOIS
BARRY S. STOLZ
062-057281
LICENSED PROFESSIONAL ENGINEER
6/9/17

TAXIWAY B RELOCATION, PHASE 1:
FILLET IMPROVEMENTS

SBG No:
3-17-SBGP-133/134
IDA No: CPS-4505

Contract No. SD058

NO.	DATE	DESCRIPTION		
		DES	DWN	REV

ISSUE: JUNE 9, 2017
PROJECT NO: 16A0107
CAD FILE: C-191-STK.DWG
DESIGN BY: JRH 03/20/17
DRAWN BY: JRH 03/20/17
REVIEWED BY: BSS 06/06/17

SHEET TITLE

PROPOSED STAKING PLAN - AREA 1

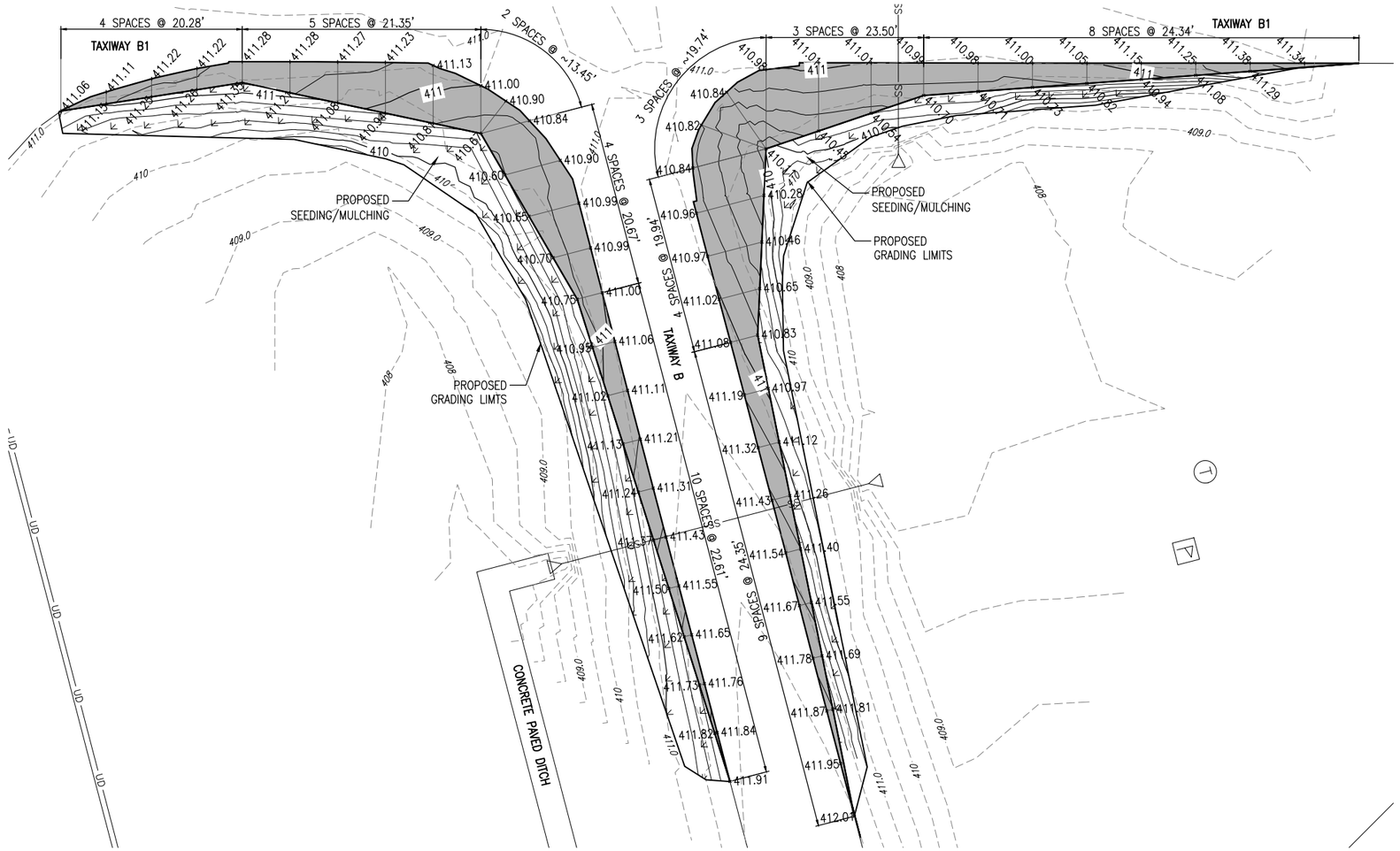

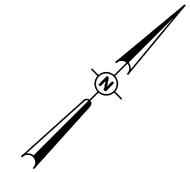

0' 15' 30' 60'

HALF SIZE SCALE: 1"= 60'
FULL SIZE SCALE: 1"= 30'

LEGEND

- EXISTING PAVEMENT
- PROPOSED PAVEMENT
- PROPOSED SEEDING/MULCHING LIMITS

HANSON
Engineering | Planning | Allied Services

Offices Nationwide
www.hanson-inc.com

Hanson Professional Services Inc.
1525 S. 6th Street
Springfield, IL 62703
phone: 217-788-2450
fax: 217-788-2503

Illinois Licensed
Professional Service Corporation
#184-001084

ST. LOUIS
DOWNTOWN AIRPORT
Bi-State Development Agency
6100 Archview Drive
Cahokia, IL 62206-1445

EXP 11/30/17
STATE OF ILLINOIS
BARRY S. STOLZ
062-057281
LICENSED PROFESSIONAL ENGINEER
6/9/17

TAXIWAY B RELOCATION,
PHASE 1:
FILLET IMPROVEMENTS

SBG No:
3-17-SBGP-133/134
IDA No: CPS-4505

Contract No. SD058

NO.	DATE	DESCRIPTION		
		DES	DWN	REV

ISSUE: JUNE 9, 2017
PROJECT NO: 16A0107
CAD FILE: C-191-STK.DWG
DESIGN BY: JRH 03/20/17
DRAWN BY: JRH 03/20/17
REVIEWED BY: BSS 06/06/17

SHEET TITLE

PROPOSED STAKING
PLAN - AREA 2

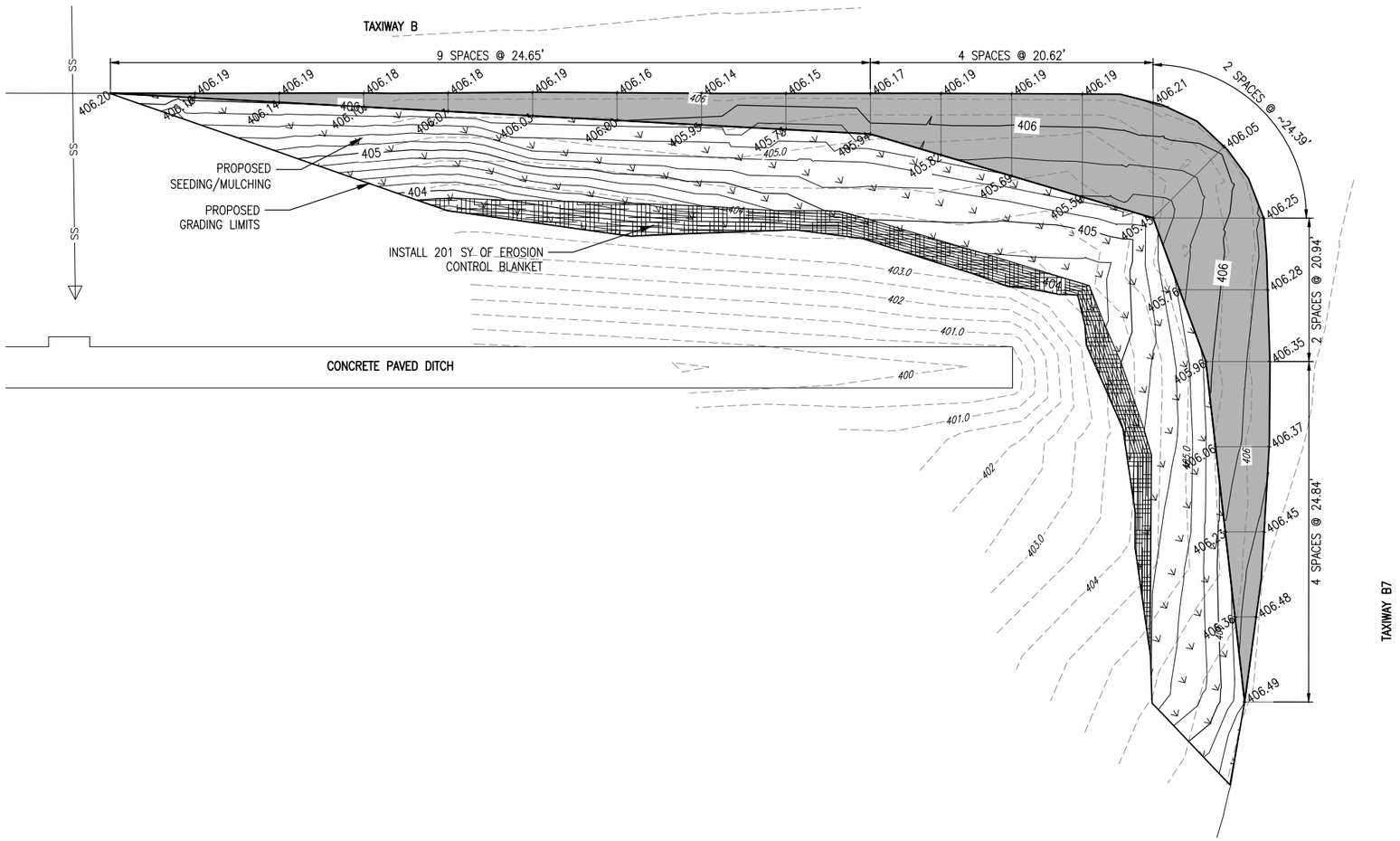

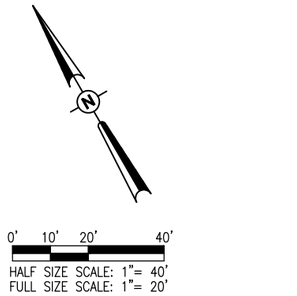

LEGEND

- EXISTING PAVEMENT
- PROPOSED PAVEMENT
- PROPOSED SEEDING/MULCHING LIMITS
- PROPOSED EROSION CONTROL BLANKET

HANSON
Engineering | Planning | Allied Services

Offices Nationwide
www.hanson-inc.com

Hanson Professional Services Inc.
1525 S. 6th Street
Springfield, IL 62703
phone: 217-788-2450
fax: 217-788-2503

Illinois Licensed
Professional Service Corporation
#184-001084

ST. LOUIS
DOWNTOWN AIRPORT
Bi-State Development Agency
6100 Archview Drive
Cahokia, IL 62206-1445

EXP 11/30/17
STATE OF ILLINOIS
BARRY S. STOLZ
062-057281
LICENSED PROFESSIONAL ENGINEER
6/9/17

TAXIWAY B RELOCATION,
PHASE 1:
FILLET IMPROVEMENTS

SBG No:
3-17-SBGP-133/134
IDA No: CPS-4505

Contract No. SD058

NO.	DATE	DESCRIPTION		
		DES	DWN	REV

ISSUE: JUNE 9, 2017
PROJECT NO: 16A0107
CAD FILE: C-191-STK.DWG
DESIGN BY: JRH 03/20/17
DRAWN BY: JRH 03/20/17
REVIEWED BY: BSS 06/06/17

SHEET TITLE

PROPOSED STAKING
PLAN - AREA 3

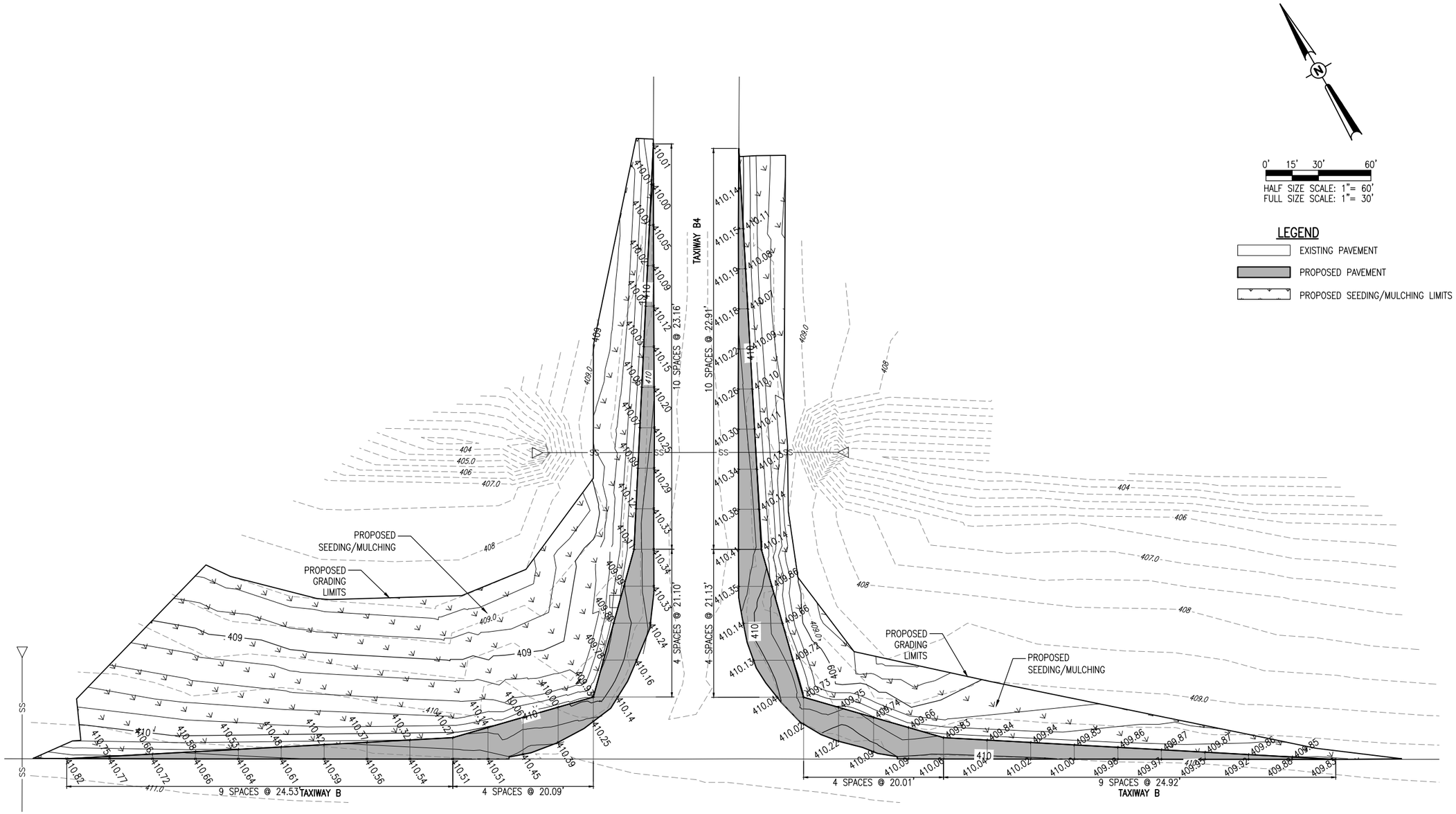

HANSON
Engineering | Planning | Allied Services

Offices Nationwide
www.hanson-inc.com

Hanson Professional Services Inc.
1525 S. 6th Street
Springfield, IL 62703
phone: 217-788-2450
fax: 217-788-2503

Illinois Licensed
Professional Service Corporation
#184-001084

ST. LOUIS
DOWNTOWN AIRPORT

Bi-State Development Agency
6100 Archview Drive
Cahokia, IL 62206-1445

EXP 11/30/17
STATE OF ILLINOIS
BARRY S. STOLZ
062-057281
LICENSED PROFESSIONAL ENGINEER
6/9/17

TAXIWAY B RELOCATION,
PHASE 1:
FILLET IMPROVEMENTS

SBG No:
3-17-SBGP-133/134
IDA No: CPS-4505

Contract No. SD058

NO.	DATE	DESCRIPTION		
		DES	DWN	REV

ISSUE: JUNE 9, 2017
PROJECT NO: 16A0107
CAD FILE: C-191-STK.DWG
DESIGN BY: JRH 03/20/17
DRAWN BY: JRH 03/20/17
REVIEWED BY: BSS 06/06/17

SHEET TITLE

PROPOSED STAKING
PLAN - AREA 4
(ADD.ALT.1)

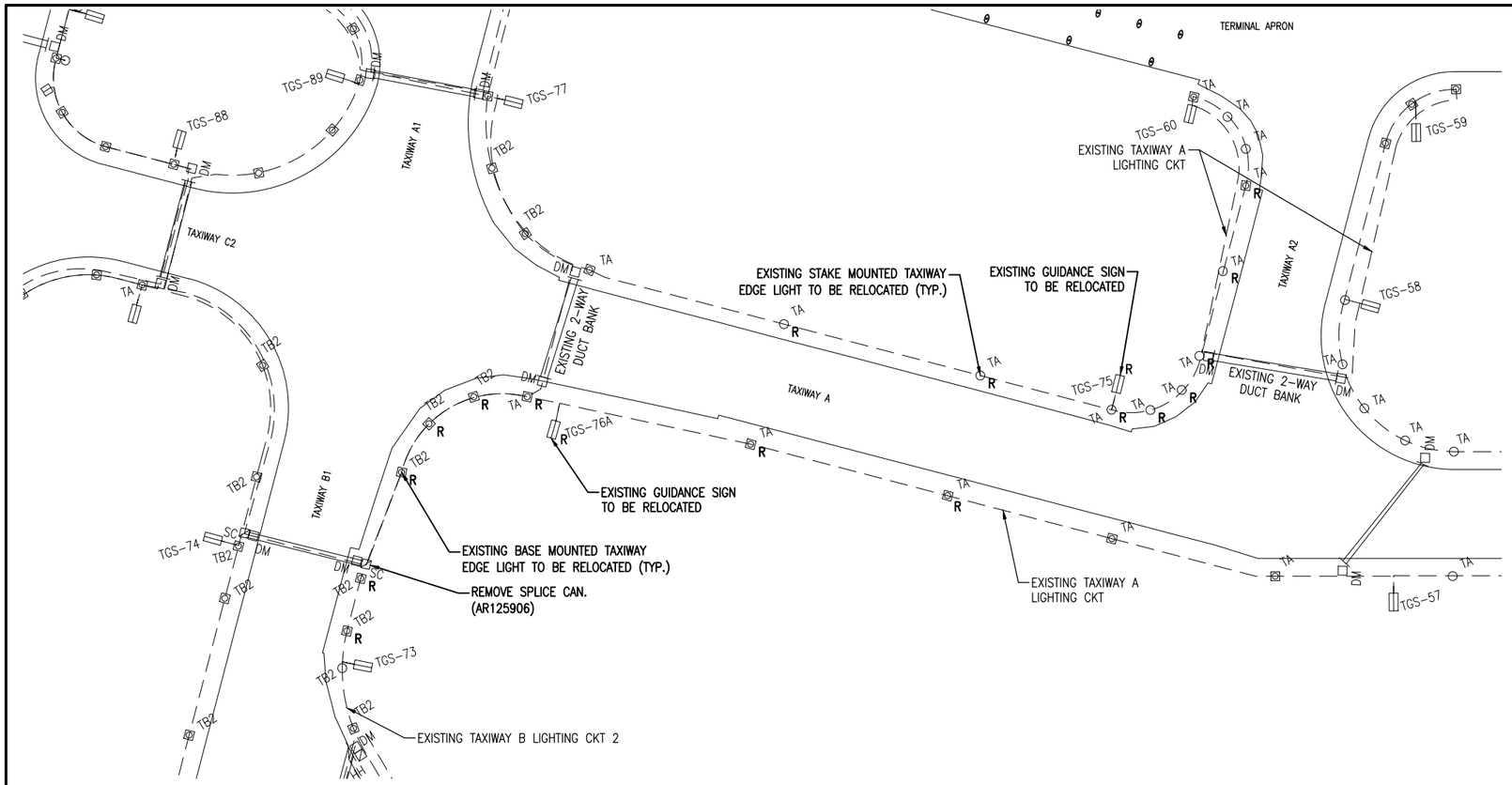

0' 20' 40' 80'

HALF SIZE SCALE: 1"= 80'
FULL SIZE SCALE: 1"= 40'

LEGEND

- EXISTING PAVEMENT
- EXISTING ELECTRICAL DUCT
- EXISTING ELECTRICAL CABLES
- EXISTING STAKE MOUNTED TAXIWAY LIGHT
- R EXISTING STAKE MOUNTED TAXIWAY LIGHT TO BE RELOCATED
- EXISTING BASE MOUNTED TAXIWAY LIGHT
- R EXISTING BASE MOUNTED TAXIWAY LIGHT TO BE RELOCATED
- EXISTING STAKE MOUNTED RUNWAY LIGHT
- EXISTING BASE MOUNTED RUNWAY LIGHT
- EXISTING TAXI GUIDANCE SIGN
- EXISTING TAXI GUIDANCE SIGN TO BE REMOVED
- R EXISTING TAXI GUIDANCE SIGN TO BE RELOCATED
- SC EXISTING SPLICE CAN

THE LOCATION, SIZE, AND TYPE OF MATERIAL OF EXISTING UNDERGROUND AND/OR ABOVEGROUND UTILITIES INDICATED ON THE PLANS ARE NOT REPRESENTED AS BEING ACCURATE, SUFFICIENT OR COMPLETE. NEITHER THE OWNER NOR THE ENGINEER ASSUMES ANY RESPONSIBILITY WHATSOEVER IN RESPECT TO THE ACCURACY, COMPLETENESS, OR SUFFICIENCY OF THE INFORMATION. THERE IS NO GUARANTEE, EITHER EXPRESSED OR IMPLIED, THAT THE LOCATIONS, SIZE AND TYPE OF MATERIAL OF EXISTING UNDERGROUND UTILITIES INDICATED ARE REPRESENTATIVE OF THOSE TO BE ENCOUNTERED IN THE CONSTRUCTION. IT SHALL BE THE CONTRACTOR'S RESPONSIBILITY TO DETERMINE THE ACTUAL LOCATION OF ALL SUCH FACILITIES, INCLUDING SERVICE CONNECTIONS TO UNDERGROUND UTILITIES. PRIOR TO CONSTRUCTION, THE CONTRACTOR SHALL NOTIFY THE UTILITY COMPANIES OF HIS OPERATIONAL PLANS AND SHALL OBTAIN FROM THE RESPECTIVE UTILITY COMPANIES DETAILED INFORMATION AND ASSISTANCE RELATIVE TO THE LOCATION OF THEIR FACILITIES AND THE WORKING SCHEDULE OF THE COMPANIES FOR REMOVAL OR ADJUSTMENT WHERE REQUIRED. IN THE EVENT AN UNEXPECTED UTILITY INTERFERENCE IS ENCOUNTERED DURING CONSTRUCTION, THE CONTRACTOR SHALL IMMEDIATELY NOTIFY THE UTILITY COMPANY OF JURISDICTION. THE OWNER'S REPRESENTATIVE AND/OR THE RESIDENT ENGINEER/TECHNICIAN SHALL ALSO BE IMMEDIATELY NOTIFIED. ANY DAMAGE TO SUCH MAINS AND SERVICES SHALL BE RESTORED TO SERVICE AT ONCE AND PAID FOR BY THE CONTRACTOR AT NO ADDITIONAL COST TO THE CONTRACT.

ALL UTILITY CABLES AND LINES SHALL BE LOCATED BY THE RESPECTIVE UTILITY. CONTACT JULIE (JOINT UTILITY LOCATION INFORMATION FOR EXCAVATORS) FOR UTILITY INFORMATION, PHONE: 1-800-892-0123. CONTACT THE FAA (FEDERAL AVIATION ADMINISTRATION) FOR ASSISTANCE IN LOCATING FAA CABLES AND UTILITIES. LOCATION OF FAA POWER, CONTROL, AND COMMUNICATION CABLES SHALL BE COORDINATED WITH AND/OR LOCATED BY THE FAA. ALSO CONTACT AIRPORT DIRECTOR/MANAGER AND AIRPORT PERSONNEL FOR ASSISTANCE IN LOCATING UNDERGROUND AIRPORT CABLES AND/OR UTILITIES. ALSO COORDINATE WORK WITH ALL ABOVEGROUND UTILITIES.

AIRFIELD LIGHTING REMOVAL/RELOCATION NOTES

1. ALL WORK, POWER OUTAGES, AND/OR SHUT DOWN OF EXISTING SYSTEMS SHALL BE COORDINATED WITH THE AIRPORT DIRECTOR/MANAGER. ONCE SHUT DOWN, THE CIRCUITS SHALL BE LABELED AS SUCH TO PREVENT ACCIDENTAL ENERGIZING OF THE RESPECTIVE CIRCUITS. ALL PERSONNEL SHALL FOLLOW U.S. DEPARTMENT OF LABOR OCCUPATIONAL SAFETY & HEALTH ADMINISTRATION (OSHA) 29 CFR PART 1910 OCCUPATIONAL SAFETY & HEALTH STANDARDS FOR ELECTRICAL SAFETY AND LOCKOUT/TAGOUT PROCEDURES INCLUDING, BUT NOT LIMITED TO, 29 CFR SECTION 1910.147 THE CONTROL OF HAZARDOUS ENERGY (LOCKOUT/TAGOUT).
2. CONTRACTOR SHALL EXAMINE THE SITE TO DETERMINE THE EXTENT OF THE WORK. CONTRACTOR SHALL FIELD VERIFY EXISTING SITE CONDITIONS. CONTRACTOR SHALL FIELD VERIFY RESPECTIVE CIRCUITS AND POWER SOURCES PRIOR TO REMOVING OR DISCONNECTING THE RESPECTIVE AIRFIELD LIGHTING, TAXI SIGN, NAVAID, OR OTHER DEVICE.
3. CONTRACTOR SHALL COMPLY WITH THE REQUIREMENTS OF FAA AC NO. 150/5370-2F (OR MOST CURRENT ISSUE) "OPERATIONAL SAFETY ON AIRPORTS DURING CONSTRUCTION".
4. CONTRACTOR SHALL COMPLY WITH THE APPLICABLE REQUIREMENTS OF NFPA 70E – STANDARD FOR ELECTRICAL SAFETY IN THE WORKPLACE.
5. THE EXISTING DUCTS AND CABLES ASSOCIATED WITH AIRFIELD LIGHTING REMOVALS, RELOCATIONS, AND/OR CABLE OR DUCT REPLACEMENTS SHALL BE ABANDONED IN PLACE UNLESS IT CONFLICTS WITH THE INSTALLATION OF A PROPOSED LIGHT OR CABLE, PAVEMENT, OR OTHER WORK, THEN IT SHALL BE REMOVED AND DISPOSED OF OFF SITE AT NO ADDITIONAL COST TO THE CONTRACT. CONTRACTOR MAY REMOVE ABANDONED CABLES AT NO ADDITIONAL COST TO THE CONTRACT AND SHALL HAVE THE SALVAGE RIGHTS TO ABANDONED CABLES.
6. EXISTING AIRFIELD LIGHTS THAT ARE DESIGNATED FOR RELOCATION SHALL BE DISCONNECTED AND CAREFULLY REMOVED BY THE CONTRACTOR AS NOT TO DAMAGE THE LIGHT. THE LIGHT ASSEMBLY, MOUNTING HARDWARE, LIGHT BASE AND/OR MOUNTING STAKE SHALL BE RELOCATED AND INSTALLED IN THE LOCATION SHOWN. A NEW 30/45 WATT FAA L-830-1 SERIES ISOLATION TRANSFORMER SHALL BE FURNISHED AND INSTALLED WITH EACH AIRFIELD LIGHT RELOCATION. EXISTING CABLES AND DUCTS ASSOCIATED WITH THE AIRFIELD LIGHT FIXTURE RELOCATION SHALL BE DISCONNECTED AND REMOVED.
7. EXISTING TAXI GUIDANCE SIGNS THAT ARE DESIGNATED FOR RELOCATION SHALL BE DISCONNECTED AND CAREFULLY REMOVED BY THE CONTRACTOR AS NOT TO DAMAGE THE SIGN. THE SIGN ASSEMBLY SHALL BE RELOCATED AND INSTALLED IN THE LOCATION SHOWN. EXISTING SIGN FOUNDATION SHALL BE REMOVED AND LEGALLY DISPOSED OFF THE AIRPORT SITE. A NEW FOUNDATION SHALL BE CONSTRUCTED WITH THE SIGN RELOCATION AS SHOWN ON THE ELECTRICAL DETAIL SHEETS. A NEW SERIES ISOLATION TRANSFORMER SHALL BE FURNISHED AND INSTALLED WITH EACH SIGN RELOCATION. EXISTING CABLES AND DUCTS ASSOCIATED WITH THE SIGN RELOCATION SHALL BE DISCONNECTED AND REMOVED.
8. EXISTING SPLICE CANS DESIGNATED FOR REMOVAL SHALL BE REMOVED AND DISPOSED OF, OFF THE AIRPORT SITE IN A LEGAL MANNER.
9. THE CONTRACTOR IS ENCOURAGED TO INSPECT EACH EXISTING LIGHT AND/OR TAXI GUIDANCE SIGN PRIOR TO RELOCATION AND IDENTIFY TO THE RESIDENT ENGINEER/RESIDENT TECHNICIAN ANY DAMAGED OR INOPERATING PARTS. ONCE THE EXISTING LIGHT OR SIGN IS REMOVED, THE CONTRACTOR IS RESPONSIBLE FOR ALL FIXTURES DAMAGED DURING THE RELOCATION. ALL LIGHTS AND SIGNS WILL BE REINSTALLED IN PROPER WORKING ORDER, OR REPLACED AT THE CONTRACTOR'S EXPENSE.
10. ALL ABOVEGROUND JUMPERS SHALL BE IN A DUCT WITH ALL CONNECTIONS SEALED. THE CONTRACTOR SHALL SECURE, IDENTIFY AND PLACE ALL TEMPORARY EXPOSED WIRING IN CONDUIT, DUCT, OR UNIT DUCT TO PREVENT ELECTROCUTION AND FIRE IGNITION SOURCES AS PER THE REQUIREMENTS OF FAA 150/5370-2F, OPERATION SAFETY ON AIRPORTS DURING CONSTRUCTION, SECTION 218, c.
11. THE CONTRACTOR IS REQUIRED TO FILL IN ALL HOLES AND DEPRESSIONS RESULTING FROM THE LIGHT, AND/OR BASE REMOVAL WITH EARTH MATERIAL. THE AREAS SHALL BE COMPACTED TO PREVENT FUTURE SETTLEMENT AND FERTILIZED, SEEDED, AND MULCHED IN ACCORDANCE WITH ITEMS 901 AND 908 RESPECTIVELY.
12. WHEN A RESPECTIVE RUNWAY IS CLOSED THE NAVAIDS FOR THAT RUNWAY SHALL BE SHUT OFF.
13. CONTRACTOR SHALL CONFIRM QUANTITY OF LIGHTS TO BE REMOVED WITH RESIDENT ENGINEER/TECHNICIAN PRIOR TO REMOVAL.
14. NO CONNECTION TO AN ACTIVE LIGHTING CIRCUIT SHALL BE BROKEN UNTIL THE CIRCUIT HAS BEEN TURNED OFF IN ACCORDANCE WITH THE ABOVE NOTE 1.

HANSON
Engineering | Planning | Allied Services

Offices Nationwide
www.hanson-inc.com

Hanson Professional Services Inc.
1525 S. 6th Street
Springfield, IL 62703
phone: 217-788-2450
fax: 217-788-2503

Illinois Licensed
Professional Service Corporation
#184-001084

ST. LOUIS
DOWNTOWN AIRPORT
Bi-State Development Agency
6100 Archview Drive
Cahokia, IL 62206-1445

LICENSED PROFESSIONAL ENGINEER
KEVIN N. LIGHTFOOT
062-047643
STATE OF ILLINOIS

Kevin N. Lightfoot
6/6/2017
EXPIRES: 11/30/2017
COVERING
ELECTRICAL DESIGN

TAXIWAY B RELOCATION,
PHASE 1:
FILLET IMPROVEMENTS

SBG No:
3-17-SBGP-133/134
IDA No: CPS-4505

Contract No. SD058

NO.	DATE	DESCRIPTION		
		DES	DWN	REV

ISSUE: JUNE 9, 2017
PROJECT NO: 16A0107
CAD FILE: C-141-ELE.DWG
DESIGN BY: JRH 03/07/17
DRAWN BY: JRH 03/07/17
REVIEWED BY: KNL 03/23/17

SHEET TITLE

EXISTING
ELECTRICAL PLAN -
AREA 1

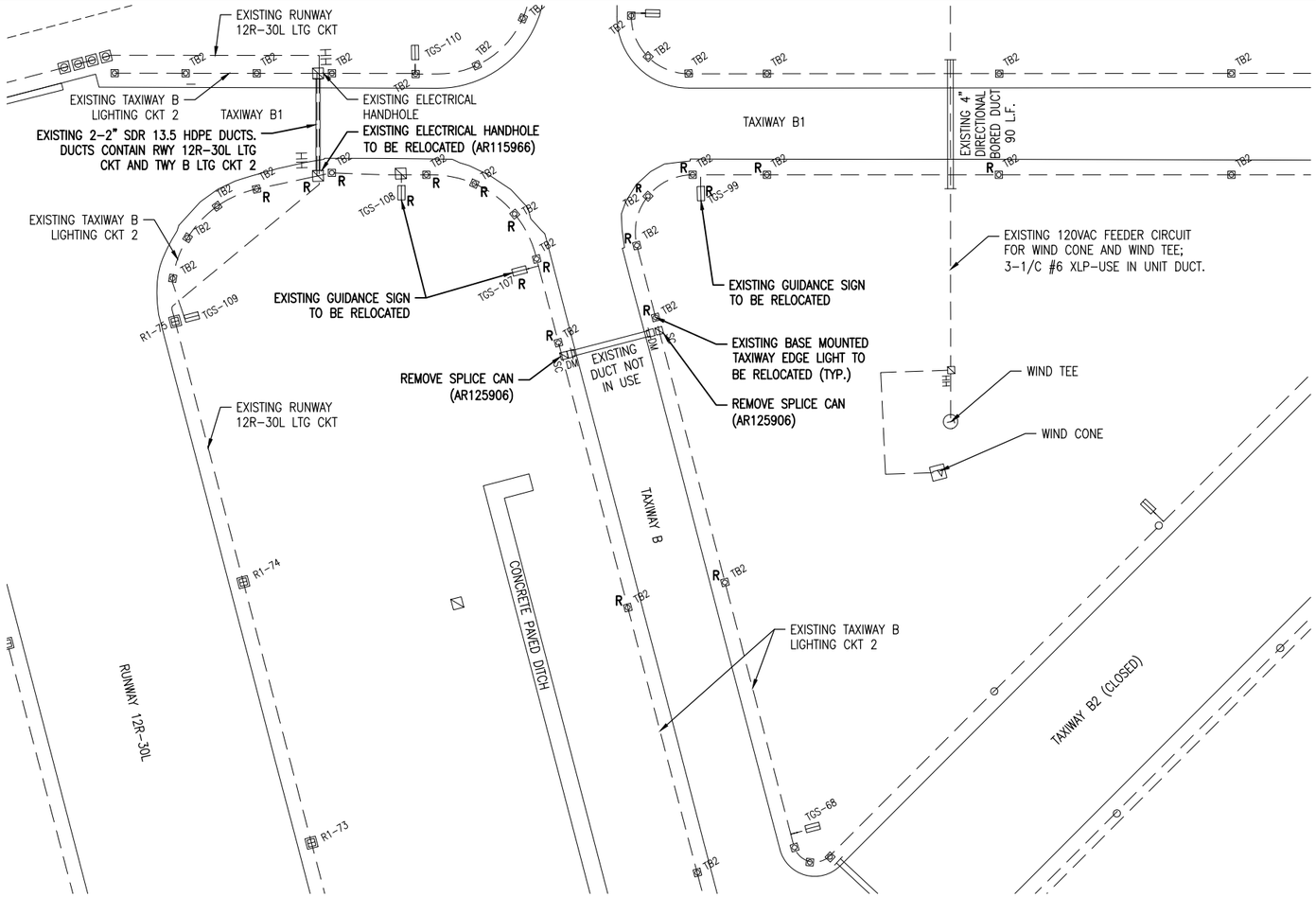

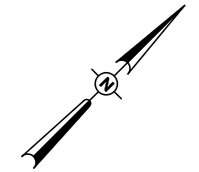

0' 25' 50' 100'
HALF SIZE SCALE: 1"= 100'
FULL SIZE SCALE: 1"= 50'

LEGEND

- EXISTING PAVEMENT
- EXISTING ELECTRICAL DUCT
- EXISTING ELECTRICAL CABLES
- EXISTING STAKE MOUNTED TAXIWAY LIGHT
- R EXISTING STAKE MOUNTED TAXIWAY LIGHT TO BE RELOCATED
- EXISTING BASE MOUNTED TAXIWAY LIGHT
- R EXISTING BASE MOUNTED TAXIWAY LIGHT TO BE RELOCATED
- EXISTING STAKE MOUNTED RUNWAY LIGHT
- EXISTING BASE MOUNTED RUNWAY LIGHT
- EXISTING TAXI GUIDANCE SIGN
- EXISTING TAXI GUIDANCE SIGN TO BE REMOVED
- R EXISTING TAXI GUIDANCE SIGN TO BE RELOCATED
- SC EXISTING SPLICE CAN
- HH EXISTING HANDHOLE
- HH R EXISTING HANDHOLE TO BE RELOCATED

THE LOCATION, SIZE, AND TYPE OF MATERIAL OF EXISTING UNDERGROUND AND/OR ABOVEGROUND UTILITIES INDICATED ON THE PLANS ARE NOT REPRESENTED AS BEING ACCURATE, SUFFICIENT OR COMPLETE. NEITHER THE OWNER NOR THE ENGINEER ASSUMES ANY RESPONSIBILITY WHATSOEVER IN RESPECT TO THE ACCURACY, COMPLETENESS, OR SUFFICIENCY OF THE INFORMATION. THERE IS NO GUARANTEE, EITHER EXPRESSED OR IMPLIED, THAT THE LOCATIONS, SIZE AND TYPE OF MATERIAL OF EXISTING UNDERGROUND UTILITIES INDICATED ARE REPRESENTATIVE OF THOSE TO BE ENCOUNTERED IN THE CONSTRUCTION. IT SHALL BE THE CONTRACTOR'S RESPONSIBILITY TO DETERMINE THE ACTUAL LOCATION OF ALL SUCH FACILITIES, INCLUDING SERVICE CONNECTIONS TO UNDERGROUND UTILITIES. PRIOR TO CONSTRUCTION, THE CONTRACTOR SHALL NOTIFY THE UTILITY COMPANIES OF HIS OPERATIONAL PLANS AND SHALL OBTAIN FROM THE RESPECTIVE UTILITY COMPANIES DETAILED INFORMATION AND ASSISTANCE RELATIVE TO THE LOCATION OF THEIR FACILITIES AND THE WORKING SCHEDULE OF THE COMPANIES FOR REMOVAL OR ADJUSTMENT WHERE REQUIRED. IN THE EVENT AN UNEXPECTED UTILITY INTERFERENCE IS ENCOUNTERED DURING CONSTRUCTION, THE CONTRACTOR SHALL IMMEDIATELY NOTIFY THE UTILITY COMPANY OF JURISDICTION. THE OWNER'S REPRESENTATIVE AND/OR THE RESIDENT ENGINEER/TECHNICIAN SHALL ALSO BE IMMEDIATELY NOTIFIED. ANY DAMAGE TO SUCH MAINS AND SERVICES SHALL BE RESTORED TO SERVICE AT ONCE AND PAID FOR BY THE CONTRACTOR AT NO ADDITIONAL COST TO THE CONTRACT.

ALL UTILITY CABLES AND LINES SHALL BE LOCATED BY THE RESPECTIVE UTILITY. CONTACT JULIE (JOINT UTILITY LOCATION INFORMATION FOR EXCAVATORS) FOR UTILITY INFORMATION, PHONE: 1-800-892-0123. CONTACT THE FAA (FEDERAL AVIATION ADMINISTRATION) FOR ASSISTANCE IN LOCATING FAA CABLES AND UTILITIES. LOCATION OF FAA POWER, CONTROL, AND COMMUNICATION CABLES SHALL BE COORDINATED WITH AND/OR LOCATED BY THE FAA. ALSO CONTACT AIRPORT DIRECTOR/MANAGER AND AIRPORT PERSONNEL FOR ASSISTANCE IN LOCATING UNDERGROUND AIRPORT CABLES AND/OR UTILITIES. ALSO COORDINATE WORK WITH ALL ABOVEGROUND UTILITIES.

AIRFIELD LIGHTING REMOVAL/RELOCATION NOTES

1. ALL WORK, POWER OUTAGES, AND/OR SHUT DOWN OF EXISTING SYSTEMS SHALL BE COORDINATED WITH THE AIRPORT DIRECTOR/MANAGER. ONCE SHUT DOWN, THE CIRCUITS SHALL BE LABELED AS SUCH TO PREVENT ACCIDENTAL ENERGIZING OF THE RESPECTIVE CIRCUITS. ALL PERSONNEL SHALL FOLLOW U.S. DEPARTMENT OF LABOR OCCUPATIONAL SAFETY & HEALTH ADMINISTRATION (OSHA) 29 CFR PART 1910 OCCUPATIONAL SAFETY & HEALTH STANDARDS FOR ELECTRICAL SAFETY AND LOCKOUT/TAGOUT PROCEDURES INCLUDING, BUT NOT LIMITED TO, 29 CFR SECTION 1910.147 THE CONTROL OF HAZARDOUS ENERGY (LOCKOUT/TAGOUT).
2. CONTRACTOR SHALL EXAMINE THE SITE TO DETERMINE THE EXTENT OF THE WORK. CONTRACTOR SHALL FIELD VERIFY EXISTING SITE CONDITIONS. CONTRACTOR SHALL FIELD VERIFY RESPECTIVE CIRCUITS AND POWER SOURCES PRIOR TO REMOVING OR DISCONNECTING THE RESPECTIVE AIRFIELD LIGHTING, TAXI SIGN, NAVAID, OR OTHER DEVICE.
3. CONTRACTOR SHALL COMPLY WITH THE REQUIREMENTS OF FAA AC NO. 150/5370-2F (OR MOST CURRENT ISSUE) "OPERATIONAL SAFETY ON AIRPORTS DURING CONSTRUCTION".
4. CONTRACTOR SHALL COMPLY WITH THE APPLICABLE REQUIREMENTS OF NFPA 70E – STANDARD FOR ELECTRICAL SAFETY IN THE WORKPLACE.
5. THE EXISTING DUCTS AND CABLES ASSOCIATED WITH AIRFIELD LIGHTING REMOVALS, RELOCATIONS, AND/OR CABLE OR DUCT REPLACEMENTS SHALL BE ABANDONED IN PLACE UNLESS IT CONFLICTS WITH THE INSTALLATION OF A PROPOSED LIGHT OR CABLE, PAVEMENT, OR OTHER WORK, THEN IT SHALL BE REMOVED AND DISPOSED OF OFF SITE AT NO ADDITIONAL COST TO THE CONTRACT. CONTRACTOR MAY REMOVE ABANDONED CABLES AT NO ADDITIONAL COST TO THE CONTRACT AND SHALL HAVE THE SALVAGE RIGHTS TO ABANDONED CABLES.
6. EXISTING AIRFIELD LIGHTS THAT ARE DESIGNATED FOR RELOCATION SHALL BE DISCONNECTED AND CAREFULLY REMOVED BY THE CONTRACTOR AS NOT TO DAMAGE THE LIGHT. THE LIGHT ASSEMBLY, MOUNTING HARDWARE, LIGHT BASE AND/OR MOUNTING STAKE SHALL BE RELOCATED AND INSTALLED IN THE LOCATION SHOWN. A NEW 30/45 WATT FAA L-830-1 SERIES ISOLATION TRANSFORMER SHALL BE FURNISHED AND INSTALLED WITH EACH AIRFIELD LIGHT RELOCATION. EXISTING CABLES AND DUCTS ASSOCIATED WITH THE AIRFIELD LIGHT FIXTURE RELOCATION SHALL BE DISCONNECTED AND REMOVED.
7. EXISTING TAXI GUIDANCE SIGNS THAT ARE DESIGNATED FOR RELOCATION SHALL BE DISCONNECTED AND CAREFULLY REMOVED BY THE CONTRACTOR AS NOT TO DAMAGE THE SIGN. THE SIGN ASSEMBLY SHALL BE RELOCATED AND INSTALLED IN THE LOCATION SHOWN. EXISTING SIGN FOUNDATION SHALL BE REMOVED AND LEGALLY DISPOSED OFF THE AIRPORT SITE. A NEW FOUNDATION SHALL BE CONSTRUCTED WITH THE SIGN RELOCATION AS SHOWN ON THE ELECTRICAL DETAIL SHEETS. A NEW SERIES ISOLATION TRANSFORMER SHALL BE FURNISHED AND INSTALLED WITH EACH SIGN RELOCATION. EXISTING CABLES AND DUCTS ASSOCIATED WITH THE SIGN RELOCATION SHALL BE DISCONNECTED AND REMOVED.
8. EXISTING SPLICE CANS DESIGNATED FOR REMOVAL SHALL BE REMOVED AND DISPOSED OF, OFF THE AIRPORT SITE IN A LEGAL MANNER.
9. THE CONTRACTOR IS ENCOURAGED TO INSPECT EACH EXISTING LIGHT AND/OR TAXI GUIDANCE SIGN PRIOR TO RELOCATION AND IDENTIFY TO THE RESIDENT ENGINEER/RESIDENT TECHNICIAN ANY DAMAGED OR INOPERATING PARTS. ONCE THE EXISTING LIGHT OR SIGN IS REMOVED, THE CONTRACTOR IS RESPONSIBLE FOR ALL FIXTURES DAMAGED DURING THE RELOCATION. ALL LIGHTS AND SIGNS WILL BE REINSTALLED IN PROPER WORKING ORDER, OR REPLACED AT THE CONTRACTOR'S EXPENSE.
10. ALL ABOVEGROUND JUMPERS SHALL BE IN A DUCT WITH ALL CONNECTIONS SEALED. THE CONTRACTOR SHALL SECURE, IDENTIFY AND PLACE ALL TEMPORARY EXPOSED WIRING IN CONDUIT, DUCT, OR UNIT DUCT TO PREVENT ELECTROCUTION AND FIRE IGNITION SOURCES AS PER THE REQUIREMENTS OF FAA 150/5370-2F, OPERATION SAFETY ON AIRPORTS DURING CONSTRUCTION, SECTION 218, c.
11. THE CONTRACTOR IS REQUIRED TO FILL IN ALL HOLES AND DEPRESSIONS RESULTING FROM THE LIGHT, AND/OR BASE REMOVAL WITH EARTH MATERIAL. THE AREAS SHALL BE COMPACTED TO PREVENT FUTURE SETTLEMENT AND FERTILIZED, SEEDED, AND MULCHED IN ACCORDANCE WITH ITEMS 901 AND 908 RESPECTIVELY.
12. WHEN A RESPECTIVE RUNWAY IS CLOSED THE NAVAIDS FOR THAT RUNWAY SHALL BE SHUT OFF.
13. CONTRACTOR SHALL CONFIRM QUANTITY OF LIGHTS TO BE REMOVED WITH RESIDENT ENGINEER/TECHNICIAN PRIOR TO REMOVAL.
14. NO CONNECTION TO AN ACTIVE LIGHTING CIRCUIT SHALL BE BROKEN UNTIL THE CIRCUIT HAS BEEN TURNED OFF IN ACCORDANCE WITH THE ABOVE NOTE 1.

HANSON
Engineering | Planning | Allied Services

Offices Nationwide
www.hanson-inc.com

Hanson Professional Services Inc.
1525 S. 6th Street
Springfield, IL 62703
phone: 217-788-2450
fax: 217-788-2503

Illinois Licensed
Professional Service Corporation
#184-001084

ST. LOUIS
DOWNTOWN AIRPORT
Bi-State Development Agency
6100 Archview Drive
Cahokia, IL 62206-1445

LICENSED PROFESSIONAL ENGINEER
KEVIN N. LIGHTFOOT
062-047643
STATE OF ILLINOIS

Kevin N. Lightfoot
6/6/2017
EXPIRES: 11/30/2017
COVERING
ELECTRICAL DESIGN

TAXIWAY B RELOCATION, PHASE 1:
FILLET IMPROVEMENTS

SBG No:
3-17-SBGP-133/134
IDA No: CPS-4505

Contract No. SD058

NO.	DATE	DESCRIPTION		
		DES	DWN	REV

ISSUE: JUNE 9, 2017
PROJECT NO: 16A0107
CAD FILE: C-141-ELE.DWG
DESIGN BY: JRH 03/07/17
DRAWN BY: JRH 03/07/17
REVIEWED BY: KNL 03/23/17

SHEET TITLE

EXISTING ELECTRICAL PLAN - AREA 2

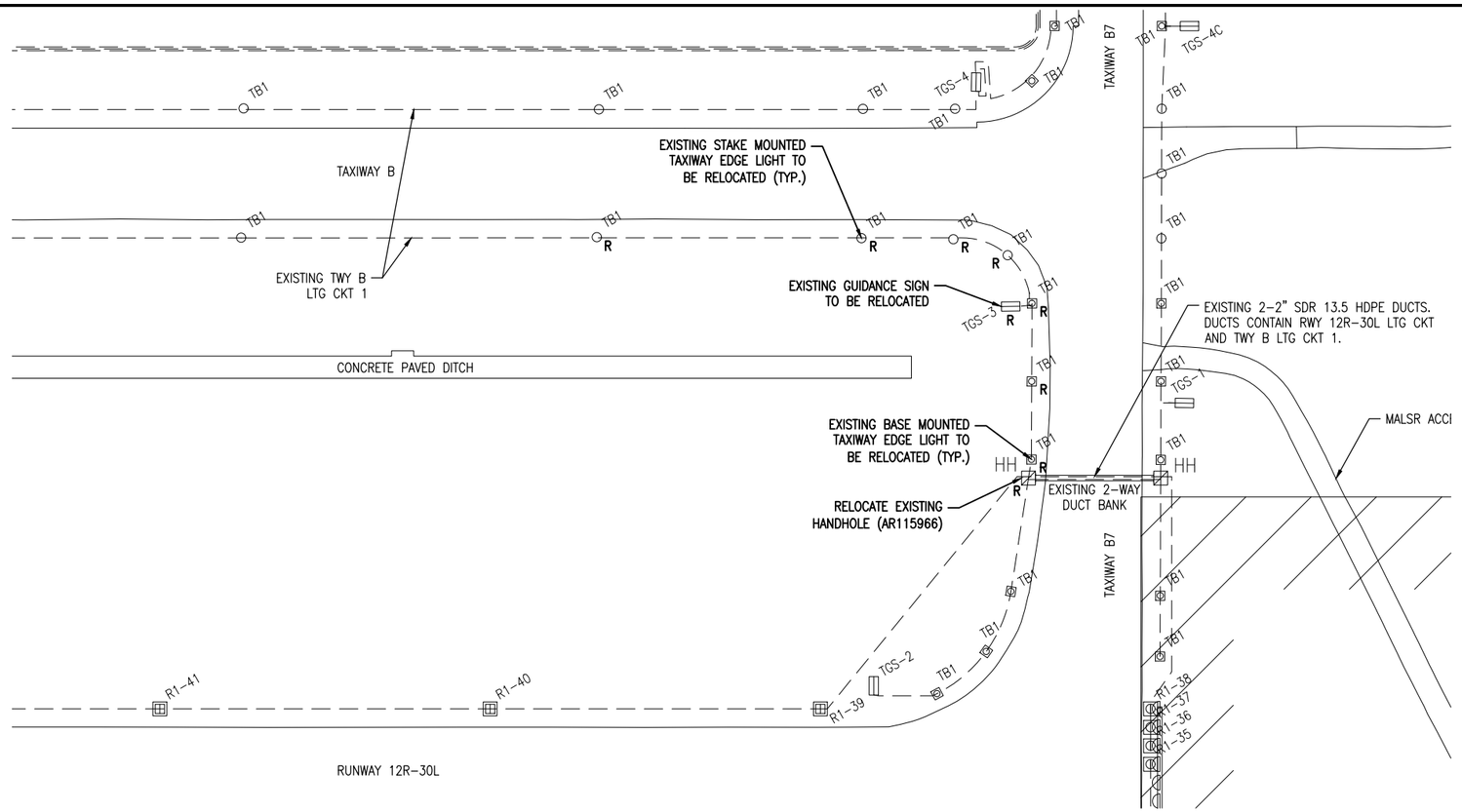

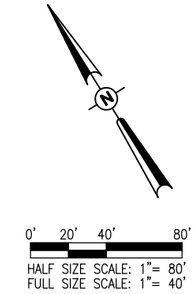

LEGEND

- EXISTING PAVEMENT
- EXISTING ELECTRICAL DUCT
- EXISTING ELECTRICAL CABLES
- EXISTING STAKE MOUNTED TAXIWAY LIGHT
- EXISTING STAKE MOUNTED TAXIWAY LIGHT TO BE RELOCATED
- EXISTING BASE MOUNTED TAXIWAY LIGHT
- EXISTING BASE MOUNTED TAXIWAY LIGHT TO BE RELOCATED
- EXISTING STAKE MOUNTED RUNWAY LIGHT
- EXISTING BASE MOUNTED RUNWAY LIGHT
- EXISTING TAXI GUIDANCE SIGN
- EXISTING TAXI GUIDANCE SIGN TO BE REMOVED
- EXISTING TAXI GUIDANCE SIGN TO BE RELOCATED
- HH EXISTING HANDHOLE
- HH EXISTING HANDHOLE TO BE RELOCATED

THE LOCATION, SIZE, AND TYPE OF MATERIAL OF EXISTING UNDERGROUND AND/OR ABOVEGROUND UTILITIES INDICATED ON THE PLANS ARE NOT REPRESENTED AS BEING ACCURATE, SUFFICIENT OR COMPLETE. NEITHER THE OWNER NOR THE ENGINEER ASSUMES ANY RESPONSIBILITY WHATSOEVER IN RESPECT TO THE ACCURACY, COMPLETENESS, OR SUFFICIENCY OF THE INFORMATION. THERE IS NO GUARANTEE, EITHER EXPRESSED OR IMPLIED, THAT THE LOCATIONS, SIZE AND TYPE OF MATERIAL OF EXISTING UNDERGROUND UTILITIES INDICATED ARE REPRESENTATIVE OF THOSE TO BE ENCOUNTERED IN THE CONSTRUCTION. IT SHALL BE THE CONTRACTOR'S RESPONSIBILITY TO DETERMINE THE ACTUAL LOCATION OF ALL SUCH FACILITIES, INCLUDING SERVICE CONNECTIONS TO UNDERGROUND UTILITIES. PRIOR TO CONSTRUCTION, THE CONTRACTOR SHALL NOTIFY THE UTILITY COMPANIES OF HIS OPERATIONAL PLANS AND SHALL OBTAIN FROM THE RESPECTIVE UTILITY COMPANIES DETAILED INFORMATION AND ASSISTANCE RELATIVE TO THE LOCATION OF THEIR FACILITIES AND THE WORKING SCHEDULE OF THE COMPANIES FOR REMOVAL OR ADJUSTMENT WHERE REQUIRED. IN THE EVENT AN UNEXPECTED UTILITY INTERFERENCE IS ENCOUNTERED DURING CONSTRUCTION, THE CONTRACTOR SHALL IMMEDIATELY NOTIFY THE UTILITY COMPANY OF JURISDICTION. THE OWNER'S REPRESENTATIVE AND/OR THE RESIDENT ENGINEER/TECHNICIAN SHALL ALSO BE IMMEDIATELY NOTIFIED. ANY DAMAGE TO SUCH MAINS AND SERVICES SHALL BE RESTORED TO SERVICE AT ONCE AND PAID FOR BY THE CONTRACTOR AT NO ADDITIONAL COST TO THE CONTRACT.

ALL UTILITY CABLES AND LINES SHALL BE LOCATED BY THE RESPECTIVE UTILITY. CONTACT JULIE (JOINT UTILITY LOCATION INFORMATION FOR EXCAVATORS) FOR UTILITY INFORMATION, PHONE: 1-800-892-0123. CONTACT THE FAA (FEDERAL AVIATION ADMINISTRATION) FOR ASSISTANCE IN LOCATING FAA CABLES AND UTILITIES. LOCATION OF FAA POWER, CONTROL, AND COMMUNICATION CABLES SHALL BE COORDINATED WITH AND/OR LOCATED BY THE FAA. ALSO CONTACT AIRPORT DIRECTOR/MANAGER AND AIRPORT PERSONNEL FOR ASSISTANCE IN LOCATING UNDERGROUND AIRPORT CABLES AND/OR UTILITIES. ALSO COORDINATE WORK WITH ALL ABOVEGROUND UTILITIES.

AIRFIELD LIGHTING REMOVAL/RELOCATION NOTES

1. ALL WORK, POWER OUTAGES, AND/OR SHUT DOWN OF EXISTING SYSTEMS SHALL BE COORDINATED WITH THE AIRPORT DIRECTOR/MANAGER. ONCE SHUT DOWN, THE CIRCUITS SHALL BE LABELED AS SUCH TO PREVENT ACCIDENTAL ENERGIZING OF THE RESPECTIVE CIRCUITS. ALL PERSONNEL SHALL FOLLOW U.S. DEPARTMENT OF LABOR OCCUPATIONAL SAFETY & HEALTH ADMINISTRATION (OSHA) 29 CFR PART 1910 OCCUPATIONAL SAFETY & HEALTH STANDARDS FOR ELECTRICAL SAFETY AND LOCKOUT/TAGOUT PROCEDURES INCLUDING, BUT NOT LIMITED TO, 29 CFR SECTION 1910.147 THE CONTROL OF HAZARDOUS ENERGY (LOCKOUT/TAGOUT).
2. CONTRACTOR SHALL EXAMINE THE SITE TO DETERMINE THE EXTENT OF THE WORK. CONTRACTOR SHALL FIELD VERIFY EXISTING SITE CONDITIONS. CONTRACTOR SHALL FIELD VERIFY RESPECTIVE CIRCUITS AND POWER SOURCES PRIOR TO REMOVING OR DISCONNECTING THE RESPECTIVE AIRFIELD LIGHTING, TAXI SIGN, NAVAID, OR OTHER DEVICE.
3. CONTRACTOR SHALL COMPLY WITH THE REQUIREMENTS OF FAA AC NO. 150/5370-2F (OR MOST CURRENT ISSUE) "OPERATIONAL SAFETY ON AIRPORTS DURING CONSTRUCTION".
4. CONTRACTOR SHALL COMPLY WITH THE APPLICABLE REQUIREMENTS OF NFPA 70E – STANDARD FOR ELECTRICAL SAFETY IN THE WORKPLACE.
5. THE EXISTING DUCTS AND CABLES ASSOCIATED WITH AIRFIELD LIGHTING REMOVALS, RELOCATIONS, AND/OR CABLE OR DUCT REPLACEMENTS SHALL BE ABANDONED IN PLACE UNLESS IT CONFLICTS WITH THE INSTALLATION OF A PROPOSED LIGHT OR CABLE, PAVEMENT, OR OTHER WORK, THEN IT SHALL BE REMOVED AND DISPOSED OF OFF SITE AT NO ADDITIONAL COST TO THE CONTRACT. CONTRACTOR MAY REMOVE ABANDONED CABLES AT NO ADDITIONAL COST TO THE CONTRACT AND SHALL HAVE THE SALVAGE RIGHTS TO ABANDONED CABLES.
6. EXISTING AIRFIELD LIGHTS THAT ARE DESIGNATED FOR RELOCATION SHALL BE DISCONNECTED AND CAREFULLY REMOVED BY THE CONTRACTOR AS NOT TO DAMAGE THE LIGHT. THE LIGHT ASSEMBLY, MOUNTING HARDWARE, LIGHT BASE AND/OR MOUNTING STAKE SHALL BE RELOCATED AND INSTALLED IN THE LOCATION SHOWN. A NEW 30/45 WATT FAA L-830-1 SERIES ISOLATION TRANSFORMER SHALL BE FURNISHED AND INSTALLED WITH EACH AIRFIELD LIGHT RELOCATION. EXISTING CABLES AND DUCTS ASSOCIATED WITH THE AIRFIELD LIGHT FIXTURE RELOCATION SHALL BE DISCONNECTED AND REMOVED.
7. EXISTING TAXI GUIDANCE SIGNS THAT ARE DESIGNATED FOR RELOCATION SHALL BE DISCONNECTED AND CAREFULLY REMOVED BY THE CONTRACTOR AS NOT TO DAMAGE THE SIGN. THE SIGN ASSEMBLY SHALL BE RELOCATED AND INSTALLED IN THE LOCATION SHOWN. EXISTING SIGN FOUNDATION SHALL BE REMOVED AND LEGALLY DISPOSED OFF THE AIRPORT SITE. A NEW FOUNDATION SHALL BE CONSTRUCTED WITH THE SIGN RELOCATION AS SHOWN ON THE ELECTRICAL DETAIL SHEETS. A NEW SERIES ISOLATION TRANSFORMER SHALL BE FURNISHED AND INSTALLED WITH EACH SIGN RELOCATION. EXISTING CABLES AND DUCTS ASSOCIATED WITH THE SIGN RELOCATION SHALL BE DISCONNECTED AND REMOVED.
8. EXISTING SPLICE CANS DESIGNATED FOR REMOVAL SHALL BE REMOVED AND DISPOSED OF, OFF THE AIRPORT SITE IN A LEGAL MANNER.
9. THE CONTRACTOR IS ENCOURAGED TO INSPECT EACH EXISTING LIGHT AND/OR TAXI GUIDANCE SIGN PRIOR TO RELOCATION AND IDENTIFY TO THE RESIDENT ENGINEER/RESIDENT TECHNICIAN ANY DAMAGED OR INOPERATING PARTS. ONCE THE EXISTING LIGHT OR SIGN IS REMOVED, THE CONTRACTOR IS RESPONSIBLE FOR ALL FIXTURES DAMAGED DURING THE RELOCATION. ALL LIGHTS AND SIGNS WILL BE REINSTALLED IN PROPER WORKING ORDER, OR REPLACED AT THE CONTRACTOR'S EXPENSE.
10. ALL ABOVEGROUND JUMPERS SHALL BE IN A DUCT WITH ALL CONNECTIONS SEALED. THE CONTRACTOR SHALL SECURE, IDENTIFY AND PLACE ALL TEMPORARY EXPOSED WIRING IN CONDUIT, DUCT, OR UNIT DUCT TO PREVENT ELECTROCUTION AND FIRE IGNITION SOURCES AS PER THE REQUIREMENTS OF FAA 150/5370-2F, OPERATION SAFETY ON AIRPORTS DURING CONSTRUCTION, SECTION 218, c.
11. THE CONTRACTOR IS REQUIRED TO FILL IN ALL HOLES AND DEPRESSIONS RESULTING FROM THE LIGHT, AND/OR BASE REMOVAL WITH EARTH MATERIAL. THE AREAS SHALL BE COMPACTED TO PREVENT FUTURE SETTLEMENT AND FERTILIZED, SEEDED, AND MULCHED IN ACCORDANCE WITH ITEMS 901 AND 908 RESPECTIVELY.
12. WHEN A RESPECTIVE RUNWAY IS CLOSED THE NAVAIDS FOR THAT RUNWAY SHALL BE SHUT OFF.
13. CONTRACTOR SHALL CONFIRM QUANTITY OF LIGHTS TO BE REMOVED WITH RESIDENT ENGINEER/TECHNICIAN PRIOR TO REMOVAL.
14. NO CONNECTION TO AN ACTIVE LIGHTING CIRCUIT SHALL BE BROKEN UNTIL THE CIRCUIT HAS BEEN TURNED OFF IN ACCORDANCE WITH THE ABOVE NOTE 1.

HANSON
Engineering | Planning | Allied Services
Offices Nationwide
www.hanson-inc.com

Hanson Professional Services Inc.
1525 S. 6th Street
Springfield, IL 62703
phone: 217-788-2450
fax: 217-788-2503

Illinois Licensed
Professional Service Corporation
#184-001084

ST. LOUIS
DOWNTOWN AIRPORT
Bi-State Development Agency
6100 Archview Drive
Cahokia, IL 62206-1445

LICENSED PROFESSIONAL ENGINEER
KEVIN N. LIGHTFOOT
062-047643
STATE OF ILLINOIS

Kevin N. Lightfoot
6/6/2017
EXPIRES: 11/30/2017
COVERING
ELECTRICAL DESIGN

TAXIWAY B RELOCATION,
PHASE 1:
FILLET IMPROVEMENTS

SBG No:
3-17-SBGP-133/134
IDA No: CPS-4505

Contract No. SD058

NO.	DATE	DESCRIPTION		
		DES	DWN	REV

ISSUE: JUNE 9, 2017
PROJECT NO: 16A0107
CAD FILE: C-141-ELE.DWG
DESIGN BY: JRH 03/07/17
DRAWN BY: JRH 03/07/17
REVIEWED BY: KNL 03/23/17

SHEET TITLE

EXISTING
ELECTRICAL PLAN -
AREA 3

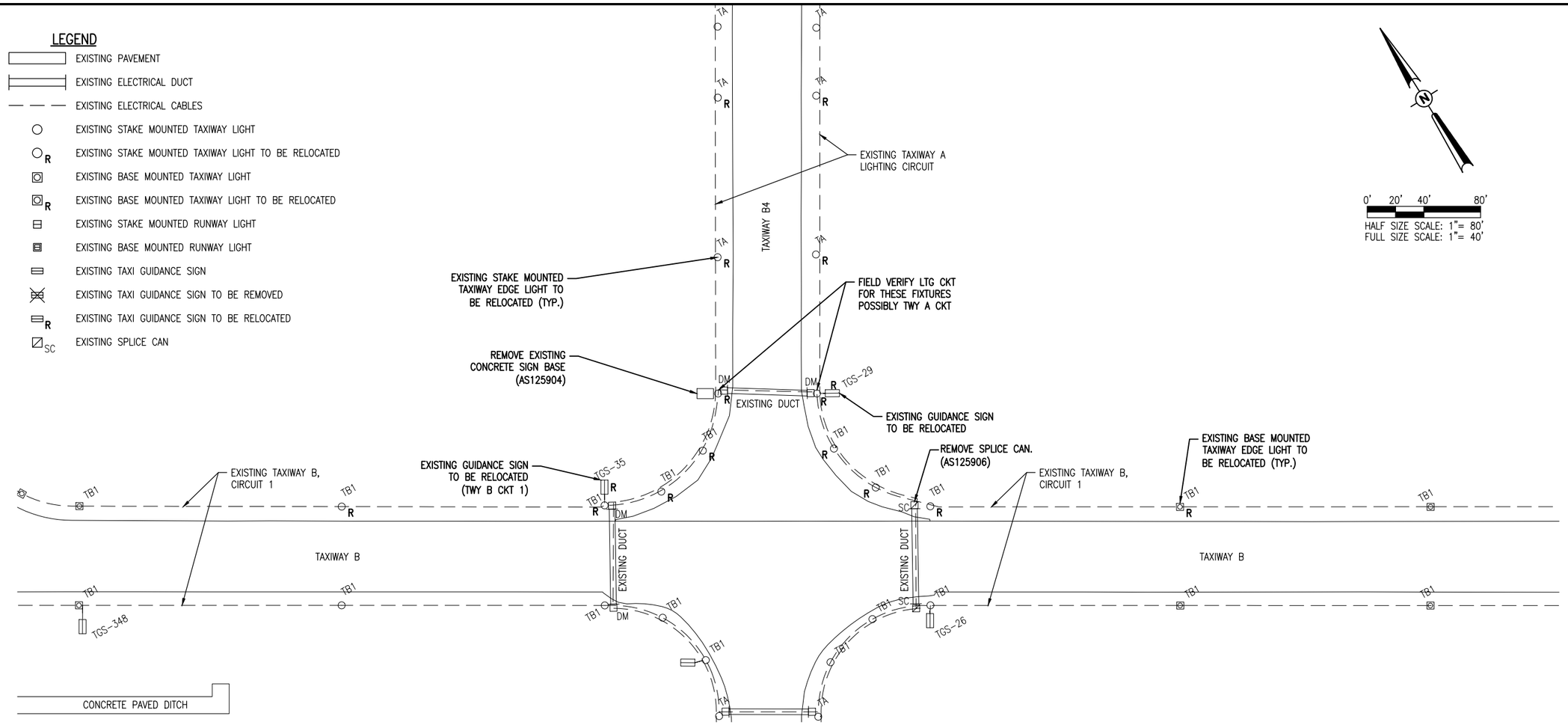

THE LOCATION, SIZE, AND TYPE OF MATERIAL OF EXISTING UNDERGROUND AND/OR ABOVEGROUND UTILITIES INDICATED ON THE PLANS ARE NOT REPRESENTED AS BEING ACCURATE, SUFFICIENT OR COMPLETE. NEITHER THE OWNER NOR THE ENGINEER ASSUMES ANY RESPONSIBILITY WHATSOEVER IN RESPECT TO THE ACCURACY, COMPLETENESS, OR SUFFICIENCY OF THE INFORMATION. THERE IS NO GUARANTEE, EITHER EXPRESSED OR IMPLIED, THAT THE LOCATIONS, SIZE AND TYPE OF MATERIAL OF EXISTING UNDERGROUND UTILITIES INDICATED ARE REPRESENTATIVE OF THOSE TO BE ENCOUNTERED IN THE CONSTRUCTION. IT SHALL BE THE CONTRACTOR'S RESPONSIBILITY TO DETERMINE THE ACTUAL LOCATION OF ALL SUCH FACILITIES, INCLUDING SERVICE CONNECTIONS TO UNDERGROUND UTILITIES. PRIOR TO CONSTRUCTION, THE CONTRACTOR SHALL NOTIFY THE UTILITY COMPANIES OF HIS OPERATIONAL PLANS AND SHALL OBTAIN FROM THE RESPECTIVE UTILITY COMPANIES DETAILED INFORMATION AND ASSISTANCE RELATIVE TO THE LOCATION OF THEIR FACILITIES AND THE WORKING SCHEDULE OF THE COMPANIES FOR REMOVAL OR ADJUSTMENT WHERE REQUIRED. IN THE EVENT AN UNEXPECTED UTILITY INTERFERENCE IS ENCOUNTERED DURING CONSTRUCTION, THE CONTRACTOR SHALL IMMEDIATELY NOTIFY THE UTILITY COMPANY OF JURISDICTION. THE OWNER'S REPRESENTATIVE AND/OR THE RESIDENT ENGINEER/TECHNICIAN SHALL ALSO BE IMMEDIATELY NOTIFIED. ANY DAMAGE TO SUCH MAINS AND SERVICES SHALL BE RESTORED TO SERVICE AT ONCE AND PAID FOR BY THE CONTRACTOR AT NO ADDITIONAL COST TO THE CONTRACT.

ALL UTILITY CABLES AND LINES SHALL BE LOCATED BY THE RESPECTIVE UTILITY. CONTACT JULIE (JOINT UTILITY LOCATION INFORMATION FOR EXCAVATORS) FOR UTILITY INFORMATION, PHONE: 1-800-892-0123. CONTACT THE FAA (FEDERAL AVIATION ADMINISTRATION) FOR ASSISTANCE IN LOCATING FAA CABLES AND UTILITIES. LOCATION OF FAA POWER, CONTROL, AND COMMUNICATION CABLES SHALL BE COORDINATED WITH AND/OR LOCATED BY THE FAA. ALSO CONTACT AIRPORT DIRECTOR/MANAGER AND AIRPORT PERSONNEL FOR ASSISTANCE IN LOCATING UNDERGROUND AIRPORT CABLES AND/OR UTILITIES. ALSO COORDINATE WORK WITH ALL ABOVEGROUND UTILITIES.

AIRFIELD LIGHTING REMOVAL/RELOCATION NOTES

1. ALL WORK, POWER OUTAGES, AND/OR SHUT DOWN OF EXISTING SYSTEMS SHALL BE COORDINATED WITH THE AIRPORT DIRECTOR/MANAGER. ONCE SHUT DOWN, THE CIRCUITS SHALL BE LABELED AS SUCH TO PREVENT ACCIDENTAL ENERGIZING OF THE RESPECTIVE CIRCUITS. ALL PERSONNEL SHALL FOLLOW U.S. DEPARTMENT OF LABOR OCCUPATIONAL SAFETY & HEALTH ADMINISTRATION (OSHA) 29 CFR PART 1910 OCCUPATIONAL SAFETY & HEALTH STANDARDS FOR ELECTRICAL SAFETY AND LOCKOUT/TAGOUT PROCEDURES INCLUDING, BUT NOT LIMITED TO, 29 CFR SECTION 1910.147 THE CONTROL OF HAZARDOUS ENERGY (LOCKOUT/TAGOUT).
2. CONTRACTOR SHALL EXAMINE THE SITE TO DETERMINE THE EXTENT OF THE WORK. CONTRACTOR SHALL FIELD VERIFY EXISTING SITE CONDITIONS. CONTRACTOR SHALL FIELD VERIFY RESPECTIVE CIRCUITS AND POWER SOURCES PRIOR TO REMOVING OR DISCONNECTING THE RESPECTIVE AIRFIELD LIGHTING, TAXI SIGN, NAVAID, OR OTHER DEVICE.
3. CONTRACTOR SHALL COMPLY WITH THE REQUIREMENTS OF FAA AC NO. 150/5370-2F (OR MOST CURRENT ISSUE) "OPERATIONAL SAFETY ON AIRPORTS DURING CONSTRUCTION".
4. CONTRACTOR SHALL COMPLY WITH THE APPLICABLE REQUIREMENTS OF NFPA 70E – STANDARD FOR ELECTRICAL SAFETY IN THE WORKPLACE.
5. THE EXISTING DUCTS AND CABLES ASSOCIATED WITH AIRFIELD LIGHTING REMOVALS, RELOCATIONS, AND/OR CABLE OR DUCT REPLACEMENTS SHALL BE ABANDONED IN PLACE UNLESS IT CONFLICTS WITH THE INSTALLATION OF A PROPOSED LIGHT OR CABLE, PAVEMENT, OR OTHER WORK, THEN IT SHALL BE REMOVED AND DISPOSED OF OFF SITE AT NO ADDITIONAL COST TO THE CONTRACT. CONTRACTOR MAY REMOVE ABANDONED CABLES AT NO ADDITIONAL COST TO THE CONTRACT AND SHALL HAVE THE SALVAGE RIGHTS TO ABANDONED CABLES.
6. EXISTING AIRFIELD LIGHTS THAT ARE DESIGNATED FOR RELOCATION SHALL BE DISCONNECTED AND CAREFULLY REMOVED BY THE CONTRACTOR AS NOT TO DAMAGE THE LIGHT. THE LIGHT ASSEMBLY, MOUNTING HARDWARE, LIGHT BASE AND/OR MOUNTING STAKE SHALL BE RELOCATED AND INSTALLED IN THE LOCATION SHOWN. A NEW 30/45 WATT FAA L-830-1 SERIES ISOLATION TRANSFORMER SHALL BE FURNISHED AND INSTALLED WITH EACH AIRFIELD LIGHT RELOCATION. EXISTING CABLES AND DUCTS ASSOCIATED WITH THE AIRFIELD LIGHT FIXTURE RELOCATION SHALL BE DISCONNECTED AND REMOVED.
7. EXISTING TAXI GUIDANCE SIGNS THAT ARE DESIGNATED FOR RELOCATION SHALL BE DISCONNECTED AND CAREFULLY REMOVED BY THE CONTRACTOR AS NOT TO DAMAGE THE SIGN. THE SIGN ASSEMBLY SHALL BE RELOCATED AND INSTALLED IN THE LOCATION SHOWN. EXISTING SIGN FOUNDATION SHALL BE REMOVED AND LEGALLY DISPOSED OFF THE AIRPORT SITE. A NEW FOUNDATION SHALL BE CONSTRUCTED WITH THE SIGN RELOCATION AS SHOWN ON THE ELECTRICAL DETAIL SHEETS. A NEW SERIES ISOLATION TRANSFORMER SHALL BE FURNISHED AND INSTALLED WITH EACH SIGN RELOCATION. EXISTING CABLES AND DUCTS ASSOCIATED WITH THE SIGN RELOCATION SHALL BE DISCONNECTED AND REMOVED.
8. EXISTING SPLICE CANS DESIGNATED FOR REMOVAL SHALL BE REMOVED AND DISPOSED OF, OFF THE AIRPORT SITE IN A LEGAL MANNER.
9. THE CONTRACTOR IS ENCOURAGED TO INSPECT EACH EXISTING LIGHT AND/OR TAXI GUIDANCE SIGN PRIOR TO RELOCATION AND IDENTIFY TO THE RESIDENT ENGINEER/RESIDENT TECHNICIAN ANY DAMAGED OR INOPERATING PARTS. ONCE THE EXISTING LIGHT OR SIGN IS REMOVED, THE CONTRACTOR IS RESPONSIBLE FOR ALL FIXTURES DAMAGED DURING THE RELOCATION. ALL LIGHTS AND SIGNS WILL BE REINSTALLED IN PROPER WORKING ORDER, OR REPLACED AT THE CONTRACTOR'S EXPENSE.
10. ALL ABOVEGROUND JUMPERS SHALL BE IN A DUCT WITH ALL CONNECTIONS SEALED. THE CONTRACTOR SHALL SECURE, IDENTIFY AND PLACE ALL TEMPORARY EXPOSED WIRING IN CONDUIT, DUCT, OR UNIT DUCT TO PREVENT ELECTROCUTION AND FIRE IGNITION SOURCES AS PER THE REQUIREMENTS OF FAA 150/5370-2F, OPERATION SAFETY ON AIRPORTS DURING CONSTRUCTION, SECTION 218, c.
11. THE CONTRACTOR IS REQUIRED TO FILL IN ALL HOLES AND DEPRESSIONS RESULTING FROM THE LIGHT, AND/OR BASE REMOVAL WITH EARTH MATERIAL. THE AREAS SHALL BE COMPACTED TO PREVENT FUTURE SETTLEMENT AND FERTILIZED, SEEDED, AND MULCHED IN ACCORDANCE WITH ITEMS 901 AND 908 RESPECTIVELY.
12. WHEN A RESPECTIVE RUNWAY IS CLOSED THE NAVAIDS FOR THAT RUNWAY SHALL BE SHUT OFF.
13. CONTRACTOR SHALL CONFIRM QUANTITY OF LIGHTS TO BE REMOVED WITH RESIDENT ENGINEER/TECHNICIAN PRIOR TO REMOVAL.
14. NO CONNECTION TO AN ACTIVE LIGHTING CIRCUIT SHALL BE BROKEN UNTIL THE CIRCUIT HAS BEEN TURNED OFF IN ACCORDANCE WITH THE ABOVE NOTE 1.

HANSON
Engineering | Planning | Allied Services
Offices Nationwide
www.hanson-inc.com

Hanson Professional Services Inc.
1525 S. 6th Street
Springfield, IL 62703
phone: 217-788-2450
fax: 217-788-2503

Illinois Licensed
Professional Service Corporation
#184-001084

ST. LOUIS
DOWNTOWN AIRPORT
Bi-State Development Agency
6100 Archview Drive
Cahokia, IL 62206-1445

LICENSED PROFESSIONAL ENGINEER
KEVIN N. LIGHTFOOT
062-047643
STATE OF ILLINOIS

Kevin N. Lightfoot
6/6/2017
EXPIRES: 11/30/2017
COVERING
ELECTRICAL DESIGN

TAXIWAY B RELOCATION, PHASE 1:
FILLET IMPROVEMENTS

SBG No:
3-17-SBGP-133/134
IDA No: CPS-4505

Contract No. SD058

NO.	DATE	DESCRIPTION		
		DES	DWN	REV

ISSUE: JUNE 9, 2017
PROJECT NO: 16A0107
CAD FILE: C-141-ELE.DWG
DESIGN BY: JRH 03/07/17
DRAWN BY: JRH 03/07/17
REVIEWED BY: KNL 03/23/17

SHEET TITLE

EXISTING ELECTRICAL PLAN - AREA 4 (ADD.ALT.1)

JUN 09, 2017 1:42 PM HERND01562
I:\16JOBS\16A0107\16A0107D\CAD\AIRPORT\SHEET\C-141-ELE.DWG

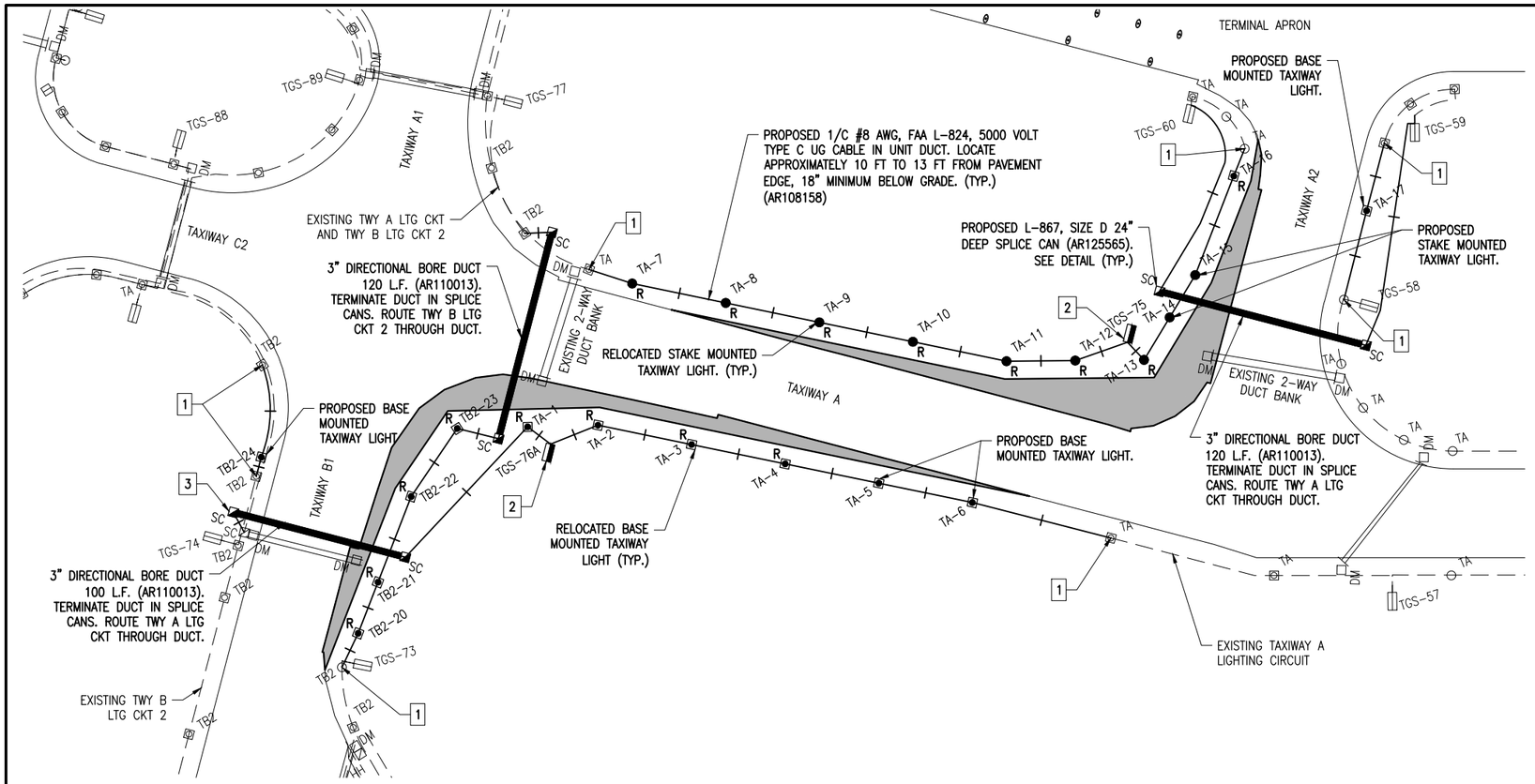

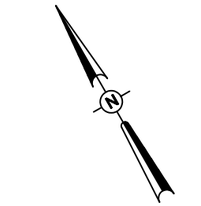

0' 20' 40' 80'
HALF SIZE SCALE: 1"= 80'
FULL SIZE SCALE: 1"= 40'

LEGEND

- EXISTING PAVEMENT
- PROPOSED PAVEMENT
- EXISTING ELECTRICAL DUCT
- PROPOSED ELECTRICAL DUCT
- EXISTING RUNWAY/TAXIWAY CIRCUIT
- PROPOSED 1/C #8 AWG, FAA L-824, 5000 VOLT TYPE C UNDERGROUND CABLE IN UNIT DUCT
- EXISTING STAKE MOUNTED TAXIWAY LIGHT
- R RELOCATED STAKE MOUNTED TAXIWAY LIGHT
- PROPOSED STAKE MOUNTED TAXIWAY LIGHT
- EXISTING BASE MOUNTED TAXIWAY LIGHT
- R RELOCATED BASE MOUNTED TAXIWAY LIGHT
- PROPOSED BASE MOUNTED TAXIWAY LIGHT
- EXISTING STAKE MOUNTED RUNWAY LIGHT
- EXISTING BASE MOUNTED RUNWAY LIGHT
- EXISTING TAXI GUIDANCE SIGN
- PROPOSED OR RELOCATED TAXI GUIDANCE SIGN
- SC EXISTING SPLICE CAN
- SC PROPOSED SPLICE CAN

THE LOCATION, SIZE, AND TYPE OF MATERIAL OF EXISTING UNDERGROUND AND/OR ABOVEGROUND UTILITIES INDICATED ON THE PLANS ARE NOT REPRESENTED AS BEING ACCURATE, SUFFICIENT OR COMPLETE. NEITHER THE OWNER NOR THE ENGINEER ASSUMES ANY RESPONSIBILITY WHATSOEVER IN RESPECT TO THE ACCURACY, COMPLETENESS, OR SUFFICIENCY OF THE INFORMATION. THERE IS NO GUARANTEE, EITHER EXPRESSED OR IMPLIED, THAT THE LOCATIONS, SIZE AND TYPE OF MATERIAL OF EXISTING UNDERGROUND UTILITIES INDICATED ARE REPRESENTATIVE OF THOSE TO BE ENCOUNTERED IN THE CONSTRUCTION. IT SHALL BE THE CONTRACTOR'S RESPONSIBILITY TO DETERMINE THE ACTUAL LOCATION OF ALL SUCH FACILITIES, INCLUDING SERVICE CONNECTIONS TO UNDERGROUND UTILITIES. PRIOR TO CONSTRUCTION, THE CONTRACTOR SHALL NOTIFY THE UTILITY COMPANIES OF HIS OPERATIONAL PLANS AND SHALL OBTAIN FROM THE RESPECTIVE UTILITY COMPANIES DETAILED INFORMATION AND ASSISTANCE RELATIVE TO THE LOCATION OF THEIR FACILITIES AND THE WORKING SCHEDULE OF THE COMPANIES FOR REMOVAL OR ADJUSTMENT WHERE REQUIRED. IN THE EVENT AN UNEXPECTED UTILITY INTERFERENCE IS ENCOUNTERED DURING CONSTRUCTION, THE CONTRACTOR SHALL IMMEDIATELY NOTIFY THE UTILITY COMPANY OF JURISDICTION. THE OWNER'S REPRESENTATIVE AND/OR THE RESIDENT ENGINEER/TECHNICIAN SHALL ALSO BE IMMEDIATELY NOTIFIED. ANY DAMAGE TO SUCH MAINS AND SERVICES SHALL BE RESTORED TO SERVICE AT ONCE AND PAID FOR BY THE CONTRACTOR AT NO ADDITIONAL COST TO THE CONTRACT.

ALL UTILITY CABLES AND LINES SHALL BE LOCATED BY THE RESPECTIVE UTILITY. CONTACT JULIE (JOINT UTILITY LOCATION INFORMATION FOR EXCAVATORS) FOR UTILITY INFORMATION, PHONE: 1-800-892-0123. CONTACT THE FAA (FEDERAL AVIATION ADMINISTRATION) FOR ASSISTANCE IN LOCATING FAA CABLES AND UTILITIES. LOCATION OF FAA POWER, CONTROL, AND COMMUNICATION CABLES SHALL BE COORDINATED WITH AND/OR LOCATED BY THE FAA. ALSO CONTACT AIRPORT DIRECTOR/MANAGER AND AIRPORT PERSONNEL FOR ASSISTANCE IN LOCATING UNDERGROUND AIRPORT CABLES AND/OR UTILITIES. ALSO COORDINATE WORK WITH ALL ABOVEGROUND UTILITIES.

NOTES

1. SEE AIRFIELD LIGHTING NOTES AND SCHEDULES SHEET.
2. PROPOSED TAXIWAY LIGHT NUMBERING IS FOR IDENTIFICATION OF RESPECTIVE LIGHT, REFERENCE FOR ITS LOCATION, AND IDENTIFICATION OF THE RESPECTIVE SERIES CIRCUIT. LIGHT NUMBERING MAY NOT CORRESPOND TO CONSECUTIVE LIGHT FIXTURE WIRING ON THE SERIES CIRCUIT. "TA" CORRESPONDS TO TAXIWAY "A" LIGHTING CIRCUIT. "TB2" CORRESPONDS TO TAXIWAY B LIGHTING CIRCUIT 2.

KEYED NOTES

1. INTERFACE/CONNECT NEW CABLES TO EXISTING LIGHT/SIGN (INCIDENTAL)
2. RELOCATED TAXI GUIDANCE SIGNS
3. INTERFACE/CONNECT NEW TWY A LTG CKT CABLES TO EXISTING TWY A LTG CKT CABLES IN SPLICE CAN. REROUTE EXISTING TWY A LTG CKT CABLES INTO SPLICE CAN.

AREA 1 AIRFIELD LIGHT FIXTURE QUANTITIES

ITEM NO.	DESCRIPTION	UNIT	QUANTITY
AR125410	MITL – STAKE MOUNTED	Each	2
AR125415	MITL – BASE MOUNTED	Each	4
AR125961	RELOCATE STAKE MOUNTED LIGHT	Each	7
AR125962	RELOCATE BASE MOUNTED LIGHT	Each	9
AR125964	RELOCATE TAXI GUIDANCE SIGN	Each	3

HANSON
Engineering | Planning | Allied Services
Offices Nationwide
www.hanson-inc.com

Hanson Professional Services Inc.
1525 S. 6th Street
Springfield, IL 62703
phone: 217-788-2450
fax: 217-788-2503

Illinois Licensed
Professional Service Corporation
#184-001084

ST. LOUIS
DOWNTOWN AIRPORT
Bi-State Development Agency
6100 Archview Drive
Cahokia, IL 62206-1445

LICENSED PROFESSIONAL ENGINEER
KEVIN N. LIGHTFOOT
062-047643
STATE OF ILLINOIS
6/6/2017
EXPIRES: 11/30/2017
COVERING
ELECTRICAL DESIGN

TAXIWAY B RELOCATION, PHASE 1:
FILLET IMPROVEMENTS

SBG No:
3-17-SBGP-133/134
IDA No: CPS-4505

Contract No. SD058

NO.	DATE	DESCRIPTION		
		DES	DWN	REV

ISSUE: JUNE 9, 2017
PROJECT NO: 16A0107
CAD FILE: C-142-ELE.DWG
DESIGN BY: JRH 03/07/17
DRAWN BY: JRH 03/07/17
REVIEWED BY: KNL 03/23/17

SHEET TITLE

PROPOSED ELECTRICAL PLAN - AREA 1

JUN 09, 2017 1:43 PM HERND01562
I:\16JOBS\16A0107\16A0107D\CAD\AIRPORT\SHEET\C-142-ELE.DWG

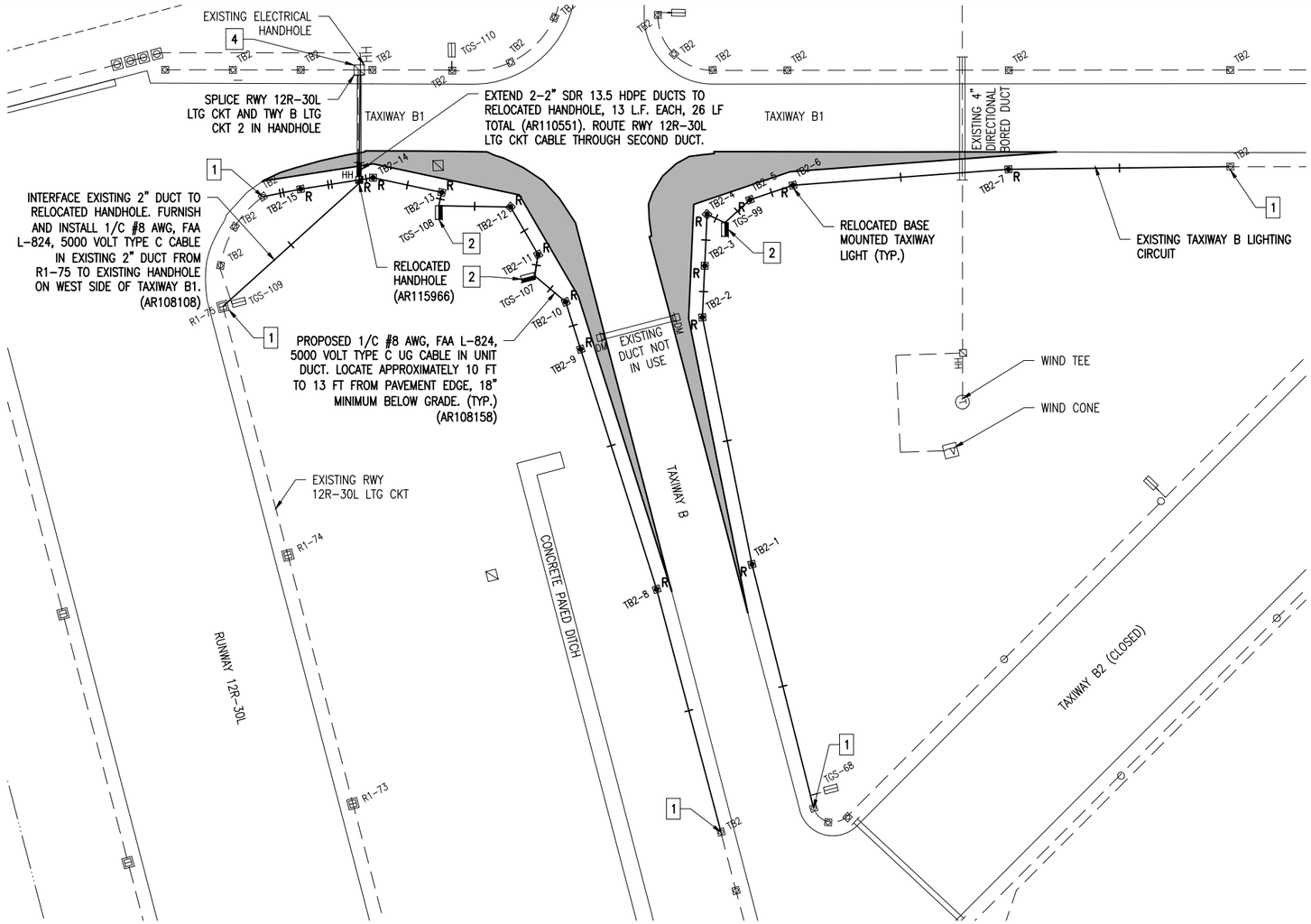

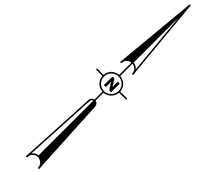

0' 25' 50' 100'

HALF SIZE SCALE: 1"= 100'
FULL SIZE SCALE: 1"= 50'

LEGEND

- EXISTING PAVEMENT
- PROPOSED PAVEMENT
- EXISTING ELECTRICAL DUCT
- PROPOSED ELECTRICAL DUCT
- EXISTING RUNWAY/TAXIWAY CIRCUIT
- PROPOSED 1/C #8 AWG, FAA L-824, 5000 VOLT TYPE C UNDERGROUND CABLE IN UNIT DUCT
- 2 (QTY) PROPOSED 1/C #8 AWG, FAA L-824, 5000 VOLT TYPE C UNDERGROUND CABLE IN UNIT DUCT
- EXISTING STAKE MOUNTED TAXIWAY LIGHT
- EXISTING BASE MOUNTED TAXIWAY LIGHT
- R RELOCATED BASE MOUNTED TAXIWAY LIGHT
- PROPOSED BASE MOUNTED TAXIWAY LIGHT
- EXISTING STAKE MOUNTED RUNWAY LIGHT
- EXISTING BASE MOUNTED RUNWAY LIGHT
- EXISTING TAXI GUIDANCE SIGN
- PROPOSED OR RELOCATED TAXI GUIDANCE SIGN
- HH EXISTING ELECTRICAL HANDHOLE
- HH R RELOCATED ELECTRICAL HANDHOLE

THE LOCATION, SIZE, AND TYPE OF MATERIAL OF EXISTING UNDERGROUND AND/OR ABOVEGROUND UTILITIES INDICATED ON THE PLANS ARE NOT REPRESENTED AS BEING ACCURATE, SUFFICIENT OR COMPLETE. NEITHER THE OWNER NOR THE ENGINEER ASSUMES ANY RESPONSIBILITY WHATSOEVER IN RESPECT TO THE ACCURACY, COMPLETENESS, OR SUFFICIENCY OF THE INFORMATION. THERE IS NO GUARANTEE, EITHER EXPRESSED OR IMPLIED, THAT THE LOCATIONS, SIZE AND TYPE OF MATERIAL OF EXISTING UNDERGROUND UTILITIES INDICATED ARE REPRESENTATIVE OF THOSE TO BE ENCOUNTERED IN THE CONSTRUCTION. IT SHALL BE THE CONTRACTOR'S RESPONSIBILITY TO DETERMINE THE ACTUAL LOCATION OF ALL SUCH FACILITIES, INCLUDING SERVICE CONNECTIONS TO UNDERGROUND UTILITIES. PRIOR TO CONSTRUCTION, THE CONTRACTOR SHALL NOTIFY THE UTILITY COMPANIES OF HIS OPERATIONAL PLANS AND SHALL OBTAIN FROM THE RESPECTIVE UTILITY COMPANIES DETAILED INFORMATION AND ASSISTANCE RELATIVE TO THE LOCATION OF THEIR FACILITIES AND THE WORKING SCHEDULE OF THE COMPANIES FOR REMOVAL OR ADJUSTMENT WHERE REQUIRED. IN THE EVENT AN UNEXPECTED UTILITY INTERFERENCE IS ENCOUNTERED DURING CONSTRUCTION, THE CONTRACTOR SHALL IMMEDIATELY NOTIFY THE UTILITY COMPANY OF JURISDICTION. THE OWNER'S REPRESENTATIVE AND/OR THE RESIDENT ENGINEER/TECHNICIAN SHALL ALSO BE IMMEDIATELY NOTIFIED. ANY DAMAGE TO SUCH MAINS AND SERVICES SHALL BE RESTORED TO SERVICE AT ONCE AND PAID FOR BY THE CONTRACTOR AT NO ADDITIONAL COST TO THE CONTRACT.

ALL UTILITY CABLES AND LINES SHALL BE LOCATED BY THE RESPECTIVE UTILITY. CONTACT JULIE (JOINT UTILITY LOCATION INFORMATION FOR EXCAVATORS) FOR UTILITY INFORMATION, PHONE: 1-800-892-0123. CONTACT THE FAA (FEDERAL AVIATION ADMINISTRATION) FOR ASSISTANCE IN LOCATING FAA CABLES AND UTILITIES. LOCATION OF FAA POWER, CONTROL, AND COMMUNICATION CABLES SHALL BE COORDINATED WITH AND/OR LOCATED BY THE FAA. ALSO CONTACT AIRPORT DIRECTOR/MANAGER AND AIRPORT PERSONNEL FOR ASSISTANCE IN LOCATING UNDERGROUND AIRPORT CABLES AND/OR UTILITIES. ALSO COORDINATE WORK WITH ALL ABOVEGROUND UTILITIES.

NOTES

1. SEE AIRFIELD LIGHTING NOTES AND SCHEDULES SHEET.
2. PROPOSED TAXIWAY LIGHT NUMBERING IS FOR IDENTIFICATION OF RESPECTIVE LIGHT, REFERENCE FOR ITS LOCATION, AND IDENTIFICATION OF THE RESPECTIVE SERIES CIRCUIT. LIGHT NUMBERING MAY NOT CORRESPOND TO CONSECUTIVE LIGHT FIXTURE WIRING ON THE SERIES CIRCUIT. "TA" CORRESPONDS TO TAXIWAY "A" LIGHTING CIRCUIT. "TB2" CORRESPONDS TO TAXIWAY B LIGHTING CIRCUIT 2.

KEYED NOTES

1. INTERFACE/CONNECT NEW CABLES TO EXISTING LIGHT/SIGN (INCIDENTAL)
2. RELOCATED TAXI GUIDANCE SIGNS
4. INTERFACE/CONNECT NEW RWY 12R-30L LTG CKT CABLES AND NEW TWY B LTG CKT 2 CABLES IN HANDHOLE. PULL EXISTING CABLES BACK FROM HANDHOLE AT EAST SIDE TO BE RELOCATED, TO PROVIDE ADEQUATE SLACK FOR CABLE SPLICES.

AREA 2 AIRFIELD LIGHT FIXTURE QUANTITIES

ITEM NO.	DESCRIPTION	UNIT	QUANTITY
AR125410	MITL – STAKE MOUNTED	Each	0
AR125415	MITL – BASE MOUNTED	Each	0
AR125961	RELOCATE STAKE MOUNTED LIGHT	Each	0
AR125962	RELOCATE BASE MOUNTED LIGHT	Each	15
AR125964	RELOCATE TAXI GUIDANCE SIGN	Each	4

HANSON
Engineering | Planning | Allied Services

Offices Nationwide
www.hanson-inc.com

Hanson Professional Services Inc.
1525 S. 6th Street
Springfield, IL 62703
phone: 217-788-2450
fax: 217-788-2503

Illinois Licensed
Professional Service Corporation
#184-001084

ST. LOUIS
DOWNTOWN AIRPORT
Bi-State Development Agency
6100 Archview Drive
Cahokia, IL 62206-1445

LICENSED PROFESSIONAL ENGINEER
KEVIN N. LIGHTFOOT
062-047643
STATE OF ILLINOIS

Kevin N. Lightfoot
6/6/2017
EXPIRES: 11/30/2017
COVERING
ELECTRICAL DESIGN

TAXIWAY B RELOCATION, PHASE 1:
FILLET IMPROVEMENTS

SBG No:
3-17-SBGP-133/134
IDA No: CPS-4505

Contract No. SD058

NO.	DATE	DESCRIPTION		
		DES	DWN	REV

ISSUE: JUNE 9, 2017
PROJECT NO: 16A0107
CAD FILE: C-142-ELE.DWG
DESIGN BY: JRH 03/07/17
DRAWN BY: JRH 03/07/17
REVIEWED BY: KNL 03/23/17

SHEET TITLE

PROPOSED ELECTRICAL PLAN - AREA 2

JUN 09, 2017 1:43 PM HERND01562
I:\16JOBS\16A0107\16A0107D\CAD\AIRPORT\SHEET\C-142-ELE.DWG

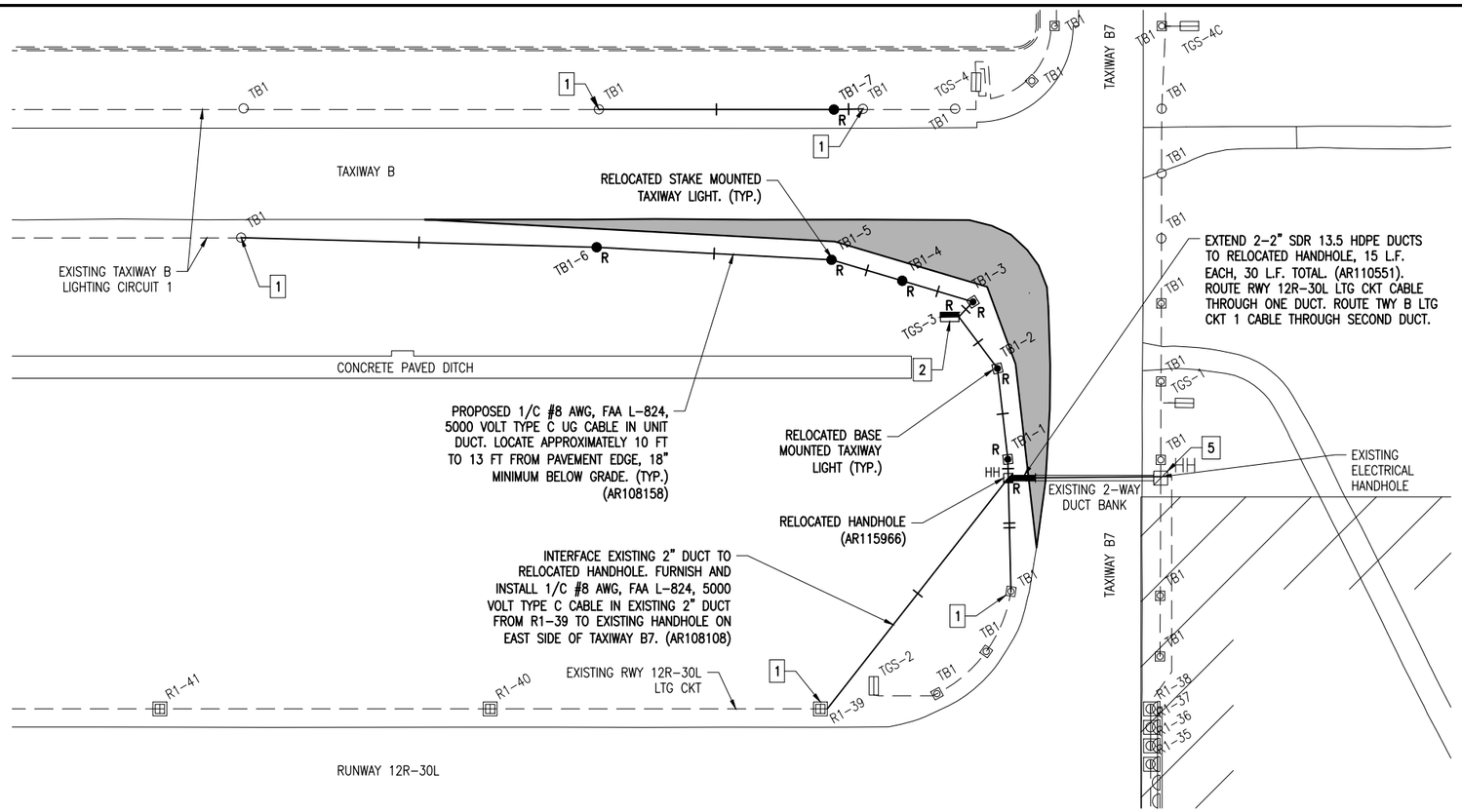

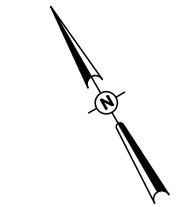

0' 20' 40' 80'

HALF SIZE SCALE: 1"= 80'
FULL SIZE SCALE: 1"= 40'

LEGEND

- EXISTING PAVEMENT
- PROPOSED PAVEMENT
- EXISTING ELECTRICAL DUCT
- PROPOSED ELECTRICAL DUCT
- EXISTING RUNWAY/TAXIWAY CIRCUIT
- PROPOSED 1/C #8 AWG, FAA L-824, 5000 VOLT TYPE C UNDERGROUND CABLE IN UNIT DUCT
- 2 (QTY) PROPOSED 1/C #8 AWG, FAA L-824, 5000 VOLT TYPE C UNDERGROUND CABLE IN UNIT DUCT
- EXISTING STAKE MOUNTED TAXIWAY LIGHT
- R RELOCATED STAKE MOUNTED TAXIWAY LIGHT
- PROPOSED STAKE MOUNTED TAXIWAY LIGHT
- EXISTING BASE MOUNTED TAXIWAY LIGHT
- R RELOCATED BASE MOUNTED TAXIWAY LIGHT
- PROPOSED BASE MOUNTED TAXIWAY LIGHT
- EXISTING STAKE MOUNTED RUNWAY LIGHT
- EXISTING BASE MOUNTED RUNWAY LIGHT
- EXISTING TAXI GUIDANCE SIGN
- PROPOSED OR RELOCATED TAXI GUIDANCE SIGN
- HH EXISTING ELECTRICAL HANDHOLE
- HH R RELOCATED ELECTRICAL HANDHOLE

THE LOCATION, SIZE, AND TYPE OF MATERIAL OF EXISTING UNDERGROUND AND/OR ABOVEGROUND UTILITIES INDICATED ON THE PLANS ARE NOT REPRESENTED AS BEING ACCURATE, SUFFICIENT OR COMPLETE. NEITHER THE OWNER NOR THE ENGINEER ASSUMES ANY RESPONSIBILITY WHATSOEVER IN RESPECT TO THE ACCURACY, COMPLETENESS, OR SUFFICIENCY OF THE INFORMATION. THERE IS NO GUARANTEE, EITHER EXPRESSED OR IMPLIED, THAT THE LOCATIONS, SIZE AND TYPE OF MATERIAL OF EXISTING UNDERGROUND UTILITIES INDICATED ARE REPRESENTATIVE OF THOSE TO BE ENCOUNTERED IN THE CONSTRUCTION. IT SHALL BE THE CONTRACTOR'S RESPONSIBILITY TO DETERMINE THE ACTUAL LOCATION OF ALL SUCH FACILITIES, INCLUDING SERVICE CONNECTIONS TO UNDERGROUND UTILITIES. PRIOR TO CONSTRUCTION, THE CONTRACTOR SHALL NOTIFY THE UTILITY COMPANIES OF HIS OPERATIONAL PLANS AND SHALL OBTAIN FROM THE RESPECTIVE UTILITY COMPANIES DETAILED INFORMATION AND ASSISTANCE RELATIVE TO THE LOCATION OF THEIR FACILITIES AND THE WORKING SCHEDULE OF THE COMPANIES FOR REMOVAL OR ADJUSTMENT WHERE REQUIRED. IN THE EVENT AN UNEXPECTED UTILITY INTERFERENCE IS ENCOUNTERED DURING CONSTRUCTION, THE CONTRACTOR SHALL IMMEDIATELY NOTIFY THE UTILITY COMPANY OF JURISDICTION. THE OWNER'S REPRESENTATIVE AND/OR THE RESIDENT ENGINEER/TECHNICIAN SHALL ALSO BE IMMEDIATELY NOTIFIED. ANY DAMAGE TO SUCH MAINS AND SERVICES SHALL BE RESTORED TO SERVICE AT ONCE AND PAID FOR BY THE CONTRACTOR AT NO ADDITIONAL COST TO THE CONTRACT.

ALL UTILITY CABLES AND LINES SHALL BE LOCATED BY THE RESPECTIVE UTILITY. CONTACT JULIE (JOINT UTILITY LOCATION INFORMATION FOR EXCAVATORS) FOR UTILITY INFORMATION, PHONE: 1-800-892-0123. CONTACT THE FAA (FEDERAL AVIATION ADMINISTRATION) FOR ASSISTANCE IN LOCATING FAA CABLES AND UTILITIES. LOCATION OF FAA POWER, CONTROL, AND COMMUNICATION CABLES SHALL BE COORDINATED WITH AND/OR LOCATED BY THE FAA. ALSO CONTACT AIRPORT DIRECTOR/MANAGER AND AIRPORT PERSONNEL FOR ASSISTANCE IN LOCATING UNDERGROUND AIRPORT CABLES AND/OR UTILITIES. ALSO COORDINATE WORK WITH ALL ABOVEGROUND UTILITIES.

NOTES

1. SEE AIRFIELD LIGHTING NOTES AND SCHEDULES SHEET.
2. PROPOSED TAXIWAY LIGHT NUMBERING IS FOR IDENTIFICATION OF RESPECTIVE LIGHT, REFERENCE FOR ITS LOCATION, AND IDENTIFICATION OF THE RESPECTIVE SERIES CIRCUIT. LIGHT NUMBERING MAY NOT CORRESPOND TO CONSECUTIVE LIGHT FIXTURE WIRING ON THE SERIES CIRCUIT. "TA" CORRESPONDS TO TAXIWAY "A" LIGHTING CIRCUIT. "TB2" CORRESPONDS TO TAXIWAY B LIGHTING CIRCUIT 2.

KEYED NOTES

1. INTERFACE/CONNECT NEW CABLES TO EXISTING LIGHT/SIGN (INCIDENTAL)
2. RELOCATED TAXI GUIDANCE SIGN
5. INTERFACE/CONNECT NEW RWY 12R-30L LTG CKT CABLES AND NEW TWY B LTG CKT 1 CABLES IN HANDHOLE. PULL EXISTING CABLES FROM HANDHOLE AT WEST SIDE TO BE RELOCATED, TO PROVIDE ADEQUATE SLACK FOR CABLE SPLICES.

AREA 3 AIRFIELD LIGHT FIXTURE QUANTITIES

ITEM NO.	DESCRIPTION	UNIT	QUANTITY
AR125410	MITL – STAKE MOUNTED	Each	0
AR125415	MITL – BASE MOUNTED	Each	0
AR125961	RELOCATE STAKE MOUNTED LIGHT	Each	4
AR125962	RELOCATE BASE MOUNTED LIGHT	Each	3
AR125964	RELOCATE TAXI GUIDANCE SIGN	Each	1

HANSON
Engineering | Planning | Allied Services
Offices Nationwide
www.hanson-inc.com

Hanson Professional Services Inc.
1525 S. 6th Street
Springfield, IL 62703
phone: 217-788-2450
fax: 217-788-2503

Illinois Licensed
Professional Service Corporation
#184-001084

ST. LOUIS
DOWNTOWN AIRPORT
Bi-State Development Agency
6100 Archview Drive
Cahokia, IL 62206-1445

LICENSED PROFESSIONAL ENGINEER
KEVIN N. LIGHTFOOT
062-047643
STATE OF ILLINOIS

Kevin N. Lightfoot
6/6/2017
EXPIRES: 11/30/2017
COVERING
ELECTRICAL DESIGN

TAXIWAY B RELOCATION, PHASE 1:
FILLET IMPROVEMENTS

SBG No:
3-17-SBGP-133/134
IDA No: CPS-4505

Contract No. SD058

NO.	DATE	DESCRIPTION		
		DES	DWN	REV

ISSUE: JUNE 9, 2017
PROJECT NO: 16A0107
CAD FILE: C-142-ELE.DWG
DESIGN BY: JRH 03/07/17
DRAWN BY: JRH 03/07/17
REVIEWED BY: KNL 03/23/17

SHEET TITLE

PROPOSED ELECTRICAL PLAN - AREA 3

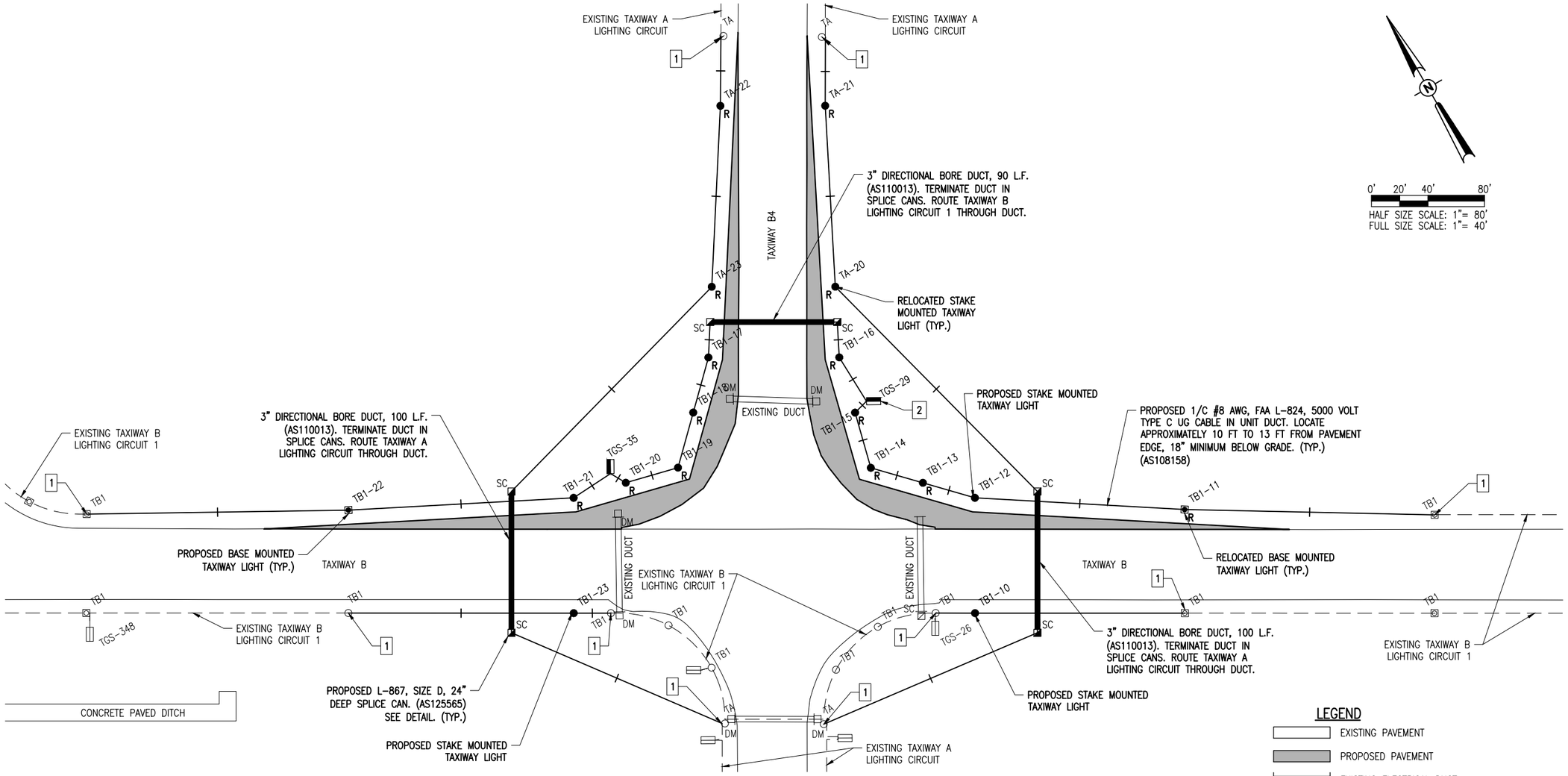

THE LOCATION, SIZE, AND TYPE OF MATERIAL OF EXISTING UNDERGROUND AND/OR ABOVEGROUND UTILITIES INDICATED ON THE PLANS ARE NOT REPRESENTED AS BEING ACCURATE, SUFFICIENT OR COMPLETE. NEITHER THE OWNER NOR THE ENGINEER ASSUMES ANY RESPONSIBILITY WHATSOEVER IN RESPECT TO THE ACCURACY, COMPLETENESS, OR SUFFICIENCY OF THE INFORMATION. THERE IS NO GUARANTEE, EITHER EXPRESSED OR IMPLIED, THAT THE LOCATIONS, SIZE AND TYPE OF MATERIAL OF EXISTING UNDERGROUND UTILITIES INDICATED ARE REPRESENTATIVE OF THOSE TO BE ENCOUNTERED IN THE CONSTRUCTION. IT SHALL BE THE CONTRACTOR'S RESPONSIBILITY TO DETERMINE THE ACTUAL LOCATION OF ALL SUCH FACILITIES, INCLUDING SERVICE CONNECTIONS TO UNDERGROUND UTILITIES. PRIOR TO CONSTRUCTION, THE CONTRACTOR SHALL NOTIFY THE UTILITY COMPANIES OF HIS OPERATIONAL PLANS AND SHALL OBTAIN FROM THE RESPECTIVE UTILITY COMPANIES DETAILED INFORMATION AND ASSISTANCE RELATIVE TO THE LOCATION OF THEIR FACILITIES AND THE WORKING SCHEDULE OF THE COMPANIES FOR REMOVAL OR ADJUSTMENT WHERE REQUIRED. IN THE EVENT AN UNEXPECTED UTILITY INTERFERENCE IS ENCOUNTERED DURING CONSTRUCTION, THE CONTRACTOR SHALL IMMEDIATELY NOTIFY THE UTILITY COMPANY OF JURISDICTION. THE OWNER'S REPRESENTATIVE AND/OR THE RESIDENT ENGINEER/TECHNICIAN SHALL ALSO BE IMMEDIATELY NOTIFIED. ANY DAMAGE TO SUCH MAINS AND SERVICES SHALL BE RESTORED TO SERVICE AT ONCE AND PAID FOR BY THE CONTRACTOR AT NO ADDITIONAL COST TO THE CONTRACT.

ALL UTILITY CABLES AND LINES SHALL BE LOCATED BY THE RESPECTIVE UTILITY. CONTACT JULIE (JOINT UTILITY LOCATION INFORMATION FOR EXCAVATORS) FOR UTILITY INFORMATION, PHONE: 1-800-892-0123. CONTACT THE FAA (FEDERAL AVIATION ADMINISTRATION) FOR ASSISTANCE IN LOCATING FAA CABLES AND UTILITIES. LOCATION OF FAA POWER, CONTROL, AND COMMUNICATION CABLES SHALL BE COORDINATED WITH AND/OR LOCATED BY THE FAA. ALSO CONTACT AIRPORT DIRECTOR/MANAGER AND AIRPORT PERSONNEL FOR ASSISTANCE IN LOCATING UNDERGROUND AIRPORT CABLES AND/OR UTILITIES. ALSO COORDINATE WORK WITH ALL ABOVEGROUND UTILITIES.

NOTES

1. SEE AIRFIELD LIGHTING NOTES AND SCHEDULES SHEET.
2. PROPOSED TAXIWAY LIGHT NUMBERING IS FOR IDENTIFICATION OF RESPECTIVE LIGHT, REFERENCE FOR ITS LOCATION, AND IDENTIFICATION OF THE RESPECTIVE SERIES CIRCUIT. LIGHT NUMBERING MAY NOT CORRESPOND TO CONSECUTIVE LIGHT FIXTURE WIRING ON THE SERIES CIRCUIT. "TA" CORRESPONDS TO TAXIWAY "A" LIGHTING CIRCUIT. "TB2" CORRESPONDS TO TAXIWAY B LIGHTING CIRCUIT 2.

KEYED NOTES

1. INTERFACE/CONNECT NEW CABLES TO EXISTING LIGHT/SIGN (INCIDENTAL)
2. RELOCATED TAXI GUIDANCE SIGNS

AREA 4 AIRFIELD LIGHT FIXTURE QUANTITIES

ITEM NO.	DESCRIPTION	UNIT	QUANTITY
AS125410	MITL – STAKE MOUNTED	Each	3
AS125415	MITL – BASE MOUNTED	Each	1
AS125961	RELOCATE STAKE MOUNTED LIGHT	Each	13
AS125962	RELOCATE BASE MOUNTED LIGHT	Each	1
AS125964	RELOCATE TAXI GUIDANCE SIGN	Each	3

LEGEND

- EXISTING PAVEMENT
- PROPOSED PAVEMENT
- EXISTING ELECTRICAL DUCT
- PROPOSED ELECTRICAL DUCT
- EXISTING RUNWAY/TAXIWAY CIRCUIT
- PROPOSED 1/C #8 AWG, FAA L-824, 5000 VOLT TYPE C UNDERGROUND CABLE IN UNIT DUCT
- EXISTING STAKE MOUNTED TAXIWAY LIGHT
- R RELOCATED STAKE MOUNTED TAXIWAY LIGHT
- PROPOSED STAKE MOUNTED TAXIWAY LIGHT
- EXISTING BASE MOUNTED TAXIWAY LIGHT
- R RELOCATED BASE MOUNTED TAXIWAY LIGHT
- PROPOSED BASE MOUNTED TAXIWAY LIGHT
- EXISTING STAKE MOUNTED RUNWAY LIGHT
- EXISTING BASE MOUNTED RUNWAY LIGHT
- EXISTING TAXI GUIDANCE SIGN
- PROPOSED OR RELOCATED TAXI GUIDANCE SIGN
- SC PROPOSED SPLICE CAN

HANSON
Engineering | Planning | Allied Services

Offices Nationwide
www.hanson-inc.com

Hanson Professional Services Inc.
1525 S. 6th Street
Springfield, IL 62703
phone: 217-788-2450
fax: 217-788-2503

Illinois Licensed
Professional Service Corporation
#184-001084

ST. LOUIS DOWNTOWN AIRPORT
Bi-State Development Agency
6100 Archview Drive
Cahokia, IL 62206-1445

LICENSED PROFESSIONAL ENGINEER
KEVIN N. LIGHTFOOT
062-047643
STATE OF ILLINOIS

Kevin N. Lightfoot
6/6/2017
EXPIRES: 11/30/2017
COVERING
ELECTRICAL DESIGN

TAXIWAY B RELOCATION, PHASE 1:
FILLET IMPROVEMENTS

SBG No:
3-17-SBGP-133/134
IDA No: CPS-4505

Contract No. SD058

NO.	DATE	DESCRIPTION		
		DES	DWN	REV

ISSUE: JUNE 9, 2017
PROJECT NO: 16A0107
CAD FILE: C-142-ELE.DWG
DESIGN BY: JRH 03/07/17
DRAWN BY: JRH 03/07/17
REVIEWED BY: KNL 03/23/17

SHEET TITLE

PROPOSED ELECTRICAL PLAN - AREA 4 (ADD.ALT.1)

JUN 09, 2017 1:44 PM HERND01562
I:\16JOBS\16A0107\16A0107D\CAD\AIRPORT\SHEET\C-142-ELE.DWG

LIGHT LOCATION TABLE		
TAG NO.	NORTHING	EASTING
TA-1	695360.77	2298146.68
TA-2	695340.47	2298180.66
TA-3	695303.19	2298219.42
TA-4	695265.91	2298258.18
TA-5	695228.63	2298296.94
TA-6	695191.35	2298335.70
TA-7	695397.66	2298239.46
TA-8	695360.35	2298278.18
TA-9	695323.03	2298316.91
TA-10	695285.72	2298355.63
TA-11	695248.40	2298394.36
TA-12	695228.10	2298427.29
TA-13	695207.80	2298460.22
TA-14	695220.31	2298485.14
TA-15	695232.83	2298510.06
TA-16	695268.46	2298558.11
TA-17	695212.08	2298610.93
TA-20	693710.05	2299353.04
TA-21	693822.17	2299415.19
TA-22	693861.65	2299352.41
TA-23	693756.60	2299279.02
TB1-1	690984.03	2303021.42
TB1-2	691028.66	2303042.91
TB1-3	691066.26	2303050.90
TB1-4	691096.29	2303024.58
TB1-5	691126.32	2302998.25
TB1-6	691199.84	2302894.33
TB1-7	691194.46	2303042.73
TB1-10	693461.93	2299313.61
TB1-11	693444.91	2299478.21
TB1-12	693531.01	2299357.02
TB1-13	693559.62	2299331.52
TB1-14	693588.23	2299306.02
TB1-15	693627.23	2299317.38
TB1-16	693666.22	2299328.75
TB1-17	693715.56	2299250.36
TB1-18	693688.32	2299220.48
TB1-19	693661.08	2299190.60
TB1-20	693671.74	2299153.65
TB1-21	693682.39	2299116.70
TB1-22	693760.01	2298977.21
TB1-23	693613.32	2299073.29
TB2-1	694593.57	2297651.16
TB2-2	694700.58	2297501.25
TB2-3	694729.25	2297476.73
TB2-4	694757.91	2297452.21
TB2-5	694787.16	2297467.87
TB2-6	694816.40	2297483.52
TB2-7	694932.66	2297590.62
TB2-8	694532.63	2297612.73
TB2-9	694622.74	2297452.19
TB2-10	694640.48	2297420.59
TB2-11	694652.01	2297382.14
TB2-12	694663.55	2297343.70
TB2-13	694636.98	2297299.66
TB2-14	694610.41	2297255.61
TB2-15	694568.15	2297222.63
TB2-20	695313.27	2298004.08
TB2-21	695331.66	2298028.82
TB2-22	695362.52	2298070.32
TB2-23	695381.08	2298112.70
TB2-24	695426.19	2298010.81

SIGN LOCATION TABLE		
TAG NO.	NORTHING	EASTING
TGS-3	691063.43	2303040.08
TGS-29	693629.76	2299328.55
TGS-35	693682.97	2299147.93
TGS-75	695221.14	2298457.65
TGS-76A	695345.67	2298152.46
TGS-99	694762.34	2297465.93
TGS-107	694638.93	2297390.96
TGS-108	694628.34	2297304.71

TAXI GUIDANCE SIGN NOTES

1. PROPOSED AND RELOCATED LIGHTED TAXI GUIDANCE SIGNS SHALL BE LOCATED SUCH THAT THE CLOSEST SIDE OF THE SIGN IS 20' FROM THE PAVEMENT EDGE OR RESPECTIVE RUNWAY SURFACE EDGE, UNLESS OTHERWISE NOTED.
2. ALL PROPOSED AND/OR RELOCATED TAXI GUIDANCE SIGNS SHALL BE TAGGED BY THE CONTRACTOR IN ACCORDANCE WITH THE SIGN NUMBERS SHOWN ON THESE CONSTRUCTION DRAWINGS.
3. RELOCATED TAXI GUIDANCE SIGNS SHALL INCLUDE NEW SERIES ISOLATION TRANSFORMERS SIZED FOR THE RESPECTIVE SIGN.
4. THE RELOCATED TAXI GUIDANCE SIGNS WILL BE PAID FOR UNDER ITEM AR125964/AS125964 RELOCATE TAXI GUIDANCE SIGN PER EACH. RELOCATION OF TAXI GUIDANCE SIGN LARGER THAN 4 MODULES WILL BE PAID FOR AS 2 (QUANTITY OF 2) SIGN RELOCATIONS UNDER ITEM AR125964/AS125964 RELOCATE TAXI GUIDANCE SIGN PER EACH.

TAXIWAY LIGHT FIXTURE NOTES

1. THE PROPOSED TAXIWAY LIGHT FIXTURES SHALL CONFORM TO ADVISORY CIRCULAR 150/5345-46 (CURRENT ISSUE IN EFFECT) AND BE FAA APPROVED FOR TYPE L-861T WITH QUARTZ LAMPS.
2. RELOCATED TAXIWAY LIGHT FIXTURES SHALL INCLUDE NEW 30/45 WATT, FAA L-830-1 SERIES ISOLATION TRANSFORMERS (SIZED FOR THE RESPECTIVE TAXIWAY LIGHT).

AIRFIELD LIGHTING NOTES

1. ALL WORK, POWER OUTAGES, AND/OR SHUT DOWN OF EXISTING SYSTEMS SHALL BE COORDINATED WITH THE AIRPORT DIRECTOR/MANAGER. ONCE SHUT DOWN, THE CIRCUITS SHALL BE LABELED AS SUCH TO PREVENT ACCIDENTAL ENERGIZING OF THE RESPECTIVE CIRCUITS. ALL PERSONNEL SHALL FOLLOW U.S. DEPARTMENT OF LABOR OCCUPATIONAL SAFETY & HEALTH ADMINISTRATION (OSHA) 29 CFR PART 1910 OCCUPATIONAL SAFETY & HEALTH STANDARDS FOR ELECTRICAL SAFETY AND LOCKOUT/TAGOUT PROCEDURES INCLUDING, BUT NOT LIMITED TO 29 CFR SECTION 1910.147 THE CONTROL OF HAZARDOUS ENERGY (LOCKOUT/TAGOUT).
2. CONTRACTOR SHALL FIELD VERIFY EXISTING SITE CONDITIONS. CONTRACTOR SHALL FIELD VERIFY RESPECTIVE CIRCUITS AND POWER SOURCES PRIOR TO REMOVING OR DISCONNECTING THE RESPECTIVE AIRFIELD LIGHTING, NAVAID, OR OTHER DEVICE.
3. PROPOSED TAXIWAY LIGHTS, GUIDANCE SIGNS, OTHER AIRFIELD LIGHTING, SPLICE CANS, HANDHOLES, MANHOLES, ELECTRICAL DUCTS, AND CABLE SHALL BE INSTALLED AT THE LOCATIONS SHOWN AND IN COMPLIANCE WITH THE SPECIFICATIONS, SPECIAL PROVISIONS, RESPECTIVE DETAILS, AND MANUFACTURER'S RECOMMENDATIONS.
4. PROPOSED AND/OR RELOCATED TAXI GUIDANCE SIGNS SHALL BE LOCATED SUCH THAT THE CLOSEST SIDE OF THE SIGN IS 20' FROM THE PAVEMENT EDGE, UNLESS SHOWN OTHERWISE.
5. PROPOSED CABLE FOR RUNWAY AND TAXIWAY LIGHTING SHALL BE INSTALLED APPROXIMATELY 12' FROM THE PAVEMENT EDGE. CABLES SHALL BE PLACED A MINIMUM OF 18" BELOW FINISHED GRADE.
6. THE PROPOSED RUNWAY AND TAXIWAY LIGHTING CABLE SHALL BE 1/C, #8 AWG, FAA L-824, 5000 VOLT, TYPE C UNDERGROUND CABLE IN UNIT DUCT OR DUCT AS DETAILED HEREIN.
7. IN AREAS WHERE THERE IS A CONGESTION OF CABLES OR WHERE THE PROPOSED CABLE CROSSES AN EXISTING CABLE, THE CONTRACTOR IS REQUIRED TO HAND DIG THE TRENCH NECESSARY FOR THE PROPOSED CABLE. AT OTHER LOCATIONS, THE PROPOSED CABLE MAY BE TRENCHED OR PLOWED INTO PLACE. HAND DIGGING, TRENCHING AND/OR PLOWING WILL BE CONSIDERED INCIDENTAL TO THE PROPOSED CABLES AND NO ADDITIONAL COMPENSATION WILL BE ALLOWED.
8. ALL PROPOSED TAXIWAY LIGHTS (L-861T) WILL BE FITTED WITH 360° BLUE LENSES.
9. ALL PROPOSED AND RELOCATED TAXIWAY LIGHTS, AND TAXI GUIDANCE SIGNS SHALL BE TAGGED BY THE CONTRACTOR IN ACCORDANCE WITH THE LIGHT NUMBERS SHOWN ON THESE CONSTRUCTION DRAWINGS. CONFIRM LIGHT NUMBERS WITH THE RESIDENT ENGINEER/TECHNICIAN.
10. SEE "TAXI GUIDANCE SIGN SCHEDULE" FOR INFO ON SIGN LEGENDS.

RELOCATED TAXI GUIDANCE SIGN SCHEDULE			
SIGN NUMBERS	LOCATION	SIDE A	SIDE B
TGS-3	TAXIWAY B7 AT INTERSECTION WITH TAXIWAY B SOUTHWEST SIDE	BLANK	↙B B7
TGS-29	TAXIWAY B4 AT INTERSECTION WITH TAXIWAY B NORTHEAST SIDE	←B B4 B→	BLANK
TGS-35	TAXIWAY B AT INTERSECTION WITH TAXIWAY B4 NORTHWEST SIDE	← B4 B B4 →	BLANK
TGS-75	TAXIWAY A AT INTERSECTION WITH TAXIWAY A2 NORTHWEST	← A2 A	BLANK
TGS-76A	TAXIWAY A AT INTERSECTION WITH TAXIWAY B1 AND TAXIWAY A1	BLANK	← B1 A A1 →
TGS-99	TAXIWAY B1 AT INTERSECTION WITH TAXIWAY B NORTHEAST SIDE	↙B B1 B→	BLANK
TGS-107	TAXIWAY B AT INTERSECTION WITH TAXIWAY B1 SOUTHEAST SIDE	BLANK	↖ B1 B B1 ↘
TGS-108	TAXIWAY B1 AT INTERSECTION WITH RWY 12R END AT HOLD LINE	B1 12R	BLANK

NOTE: TAXI GUIDANCE SIGNS DESIGNATED FOR RELOCATION ARE EXISTING SIGNS, MANUFACTURED BY LUMACURVE.

TAXI GUIDANCE SIGN SCHEDULE

D	TYPE L-858L LOCATION SIGN – YELLOW LEGEND AND BORDER ON A BLACK BACKGROUND
18-36	TYPE L-858R MANDATORY INSTRUCTION SIGN – BLACK OUTLINE ON OUTSIDE EDGE OF WHITE LEGEND ON A RED BACKGROUND
RAMP ↑	TYPE L-858Y DIRECTION, DESTINATION, AND BOUNDARY SIGN – BLACK LEGEND ON A YELLOW BACKGROUND
BLANK	BLANK – BLACK BACKGROUND

11. THE CONTRACTOR SHALL SECURE, IDENTIFY AND PLACE ALL TEMPORARY EXPOSED WIRING IN CONDUIT, DUCT OR UNIT DUCT TO PREVENT ELECTROCUTION AND FIRE IGNITION SOURCES AS PER THE REQUIREMENTS OF FAA AC 150/5370-2F, PART 218, PARAGRAPH C. ALL LABOR, MATERIALS, AND TIME NECESSARY TO COMPLY WITH THIS REQUIREMENT SHALL BE CONSIDERED INCIDENTAL TO THE CONTRACT AND NO ADDITIONAL COMPENSATION WILL BE ALLOWED.
12. HOMERUN CABLES FOR A RESPECTIVE CIRCUIT THAT ARE INSTALLED IN CONDUIT OR DUCT SHALL BE RUN TOGETHER IN THE SAME RACEWAY OR DUCT.
13. EXISTING AIRFIELD LIGHTING CABLES (SCHEDULED FOR REPLACEMENT) IN AREAS OF NEW WORK SHALL BE DISCONNECTED & REMOVED WHERE IN CONFLICT WITH NEW CONSTRUCTION. IN OTHER AREAS CABLES MAY BE ABANDONED IN PLACE.
14. THE CONTRACTOR IS REQUIRED TO FILL IN ALL HOLES AND DEPRESSIONS RESULTING FROM THE NEW WORK, WITH EARTH MATERIAL. THE AREAS SHALL BE COMPACTED TO PREVENT FUTURE SETTLEMENT AND FERTILIZED, SEEDED, AND MULCHED IN ACCORDANCE WITH ITEMS 901 AND 908 RESPECTIVELY.
15. IN THE EVENT THAT OTHER CONSTRUCTION PROJECTS ARE IN PROGRESS AT THE AIRPORT AT THE SAME TIME AS THIS PROJECT, THE CONTRACTOR WILL BE REQUIRED TO COOPERATE WITH ALL OTHER CONTRACTORS AND THE AIRPORT MANAGER IN THE COORDINATION OF THE WORK.
16. NO CONNECTION TO AN ACTIVE LIGHTING CIRCUIT WILL BE BROKEN UNTIL THE CIRCUIT HAS BEEN TURNED OFF IN ACCORDANCE WITH NOTE 1.

HANSON
Engineering | Planning | Allied Services

Offices Nationwide
www.hanson-inc.com

Hanson Professional Services Inc.
1525 S. 6th Street
Springfield, IL 62703
phone: 217-788-2450
fax: 217-788-2503

Illinois Licensed
Professional Service Corporation
#184-001084

ST. LOUIS
DOWNTOWN AIRPORT
Bi-State Development Agency
6100 Archview Drive
Cahokia, IL 62206-1445

LICENSED PROFESSIONAL ENGINEER
KEVIN N. LIGHTFOOT
062-047643
STATE OF ILLINOIS

Kevin N. Lightfoot
6/6/2017
EXPIRES: 11/30/2017
COVERING
ELECTRICAL DESIGN

TAXIWAY B RELOCATION,
PHASE 1:
FILLET IMPROVEMENTS

SBG No:
3-17-SBGP-133/134
IDA No: CPS-4505

Contract No. SD058

NO.	DATE	DESCRIPTION		
		DES	DWN	REV

ISSUE: JUNE 9, 2017
PROJECT NO: 16A0107
CAD FILE: E-641-SCHED.DWG
DESIGN BY: KNL 03/18/2017
DRAWN BY: RAD 03/22/2017
REVIEWED BY: BSS 03/23/17

SHEET TITLE

AIRFIELD LIGHTING
NOTES AND
SCHEDULES

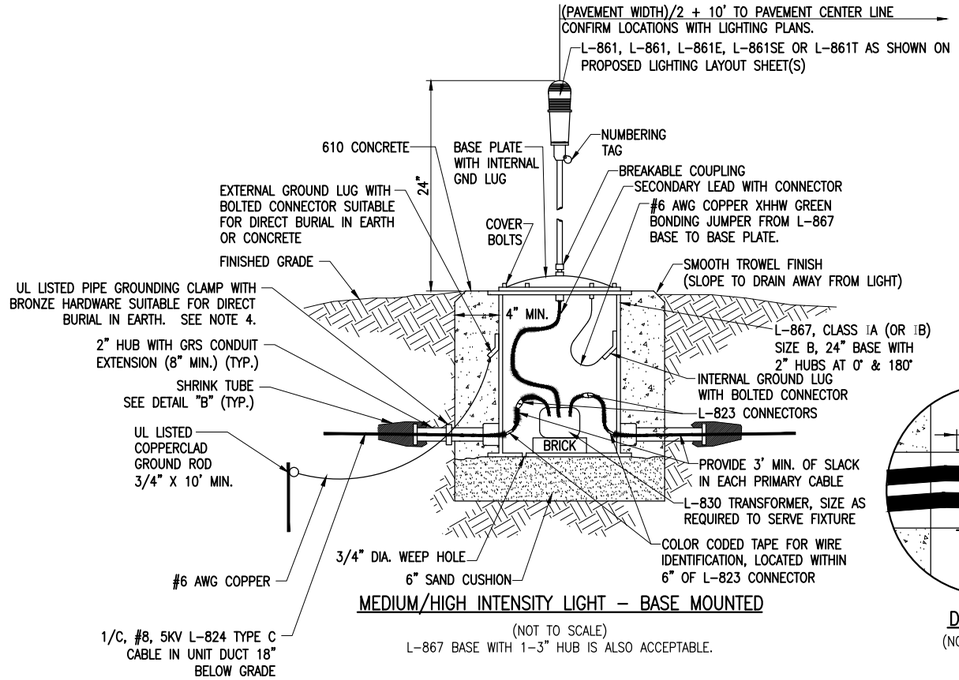

MEDIUM/HIGH INTENSITY LIGHT – BASE MOUNTED

(NOT TO SCALE)

L-867 BASE WITH 1-3" HUB IS ALSO ACCEPTABLE.

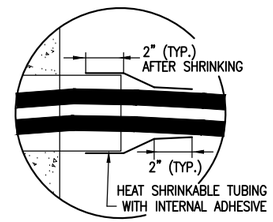

DETAIL "B"

(NOT TO SCALE)

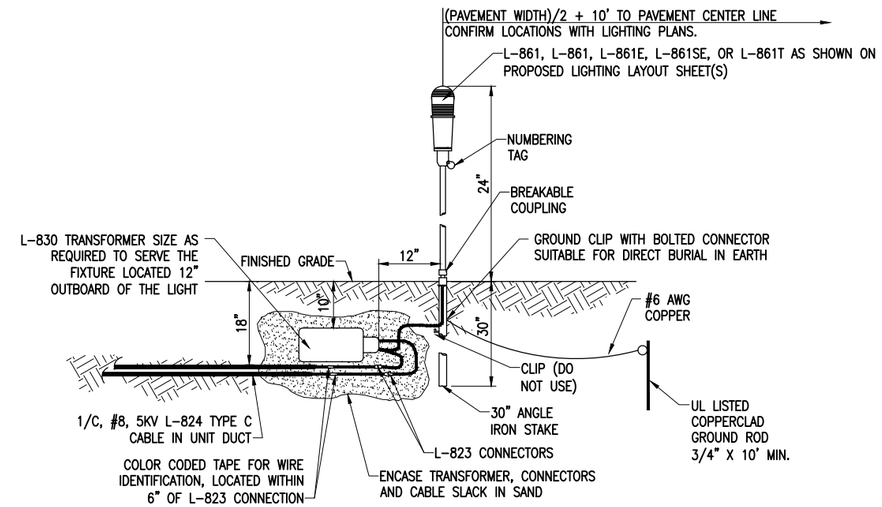

MEDIUM INTENSITY LIGHT – STAKE MOUNTED

(NOT TO SCALE)

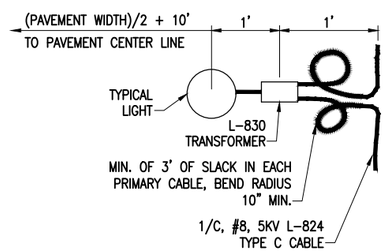

PLAN VIEW

NOTES:
SEE PROPOSED LIGHTING LAYOUT SHEET FOR LIGHT LOCATIONS.

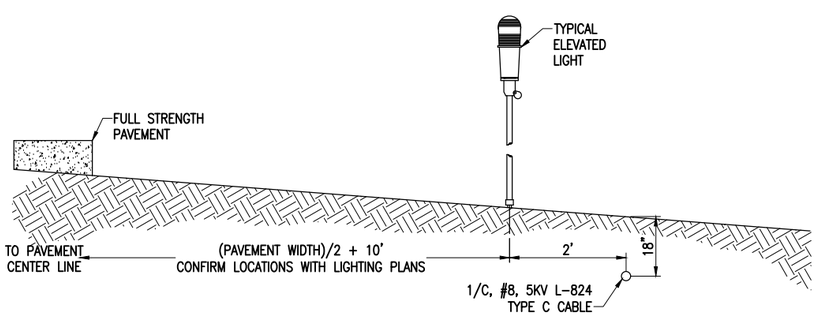

PROFILE VIEW

LIGHT AND CABLE INSTALLATION DETAIL

(NOT TO SCALE)

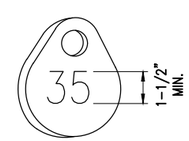

NOTE:
AFFIX NON-CORROSIVE TAG TO FIXTURE FACING RUNWAY WITH SET SCREW, WIRE TIE, OR METAL BAND. NUMERALS SHALL BE ENGRAVED FOR PERMANENT READABILITY.

NUMBERING TAG DETAIL

(NOT TO SCALE)

NOTES:

1. SEE ELECTRICAL NOTES SHEETS.
2. SEE "ELECTRICAL NOTES SHEET 2" AND "GROUNDING NOTES" SHEET FOR GROUNDING NOTES FOR AIRFIELD LIGHTING.
3. SEE PROPOSED LIGHTING LAYOUT SHEET(S) FOR LIGHT LOCATIONS
4. WHERE GROUND LUGS ARE NOT ACCESSIBLE ON EXISTING BASE CANS SCHEDULED TO BE RELOCATED, PROVIDE A UL LISTED PIPE GROUND CLAMP RATED FOR DIRECT BURIAL IN EARTH AND BOND TO THE METAL CONDUIT EXTENSION TO PROVIDE GROUND PATH TO LIGHT BASE.

PER FAA AC 150/5340-30H DESIGN AND INSTALLATION DETAILS FOR AIRPORT VISUAL AIDS, A LIGHT BASE GROUND MUST BE INSTALLED AT EACH LIGHT FIXTURE. A LIGHT BASE GROUND SHALL BE INSTALLED AT EACH STAKE MOUNTED LIGHT AND EACH TRANSFORMER BASE/LIGHT CAN ASSOCIATED WITH RUNWAY LIGHTS, TAXIWAY LIGHTS, AND LIGHTED TAXI GUIDANCE SIGNS. THE LIGHT BASE GROUND SHALL BE A #6 AWG BARE COPPER CONDUCTOR CONNECTED TO THE GROUND LUG ON THE RESPECTIVE L-867 TRANSFORMER BASE/LIGHT CAN OR MOUNTING STAKE AND A 3/4-INCH DIAMETER BY 10-FEET LONG (MINIMUM) UL LISTED COPPER CLAD GROUND ROD.

HANSON
Engineering | Planning | Allied Services

Offices Nationwide
www.hanson-inc.com

Hanson Professional Services Inc.
1525 S. 6th Street
Springfield, IL 62703
phone: 217-788-2450
fax: 217-788-2503

Illinois Licensed
Professional Service Corporation
#184-001084

ST. LOUIS
DOWNTOWN AIRPORT
Bi-State Development Agency
6100 Archview Drive
Cahokia, IL 62206-1445

LICENSED PROFESSIONAL ENGINEER
KEVIN N. LIGHTFOOT
062-047643
STATE OF ILLINOIS

Kevin N. Lightfoot
6/6/2017
EXPIRES: 11/30/2017
COVERING
ELECTRICAL DESIGN

TAXIWAY B RELOCATION, PHASE 1:
FILLET IMPROVEMENTS

SBG No:
3-17-SBGP-133/134
IDA No: CPS-4505

Contract No. SD058

NO.	DATE	DESCRIPTION		
		DES	DWN	REV

ISSUE: JUNE 9, 2017
PROJECT NO: 16A0107
CAD FILE: E-501-ELEC.DWG
DESIGN BY: KNL 03/18/2017
DRAWN BY: RAD 03/22/2017
REVIEWED BY: BSS 03/23/17

SHEET TITLE

AIRFIELD LIGHTING DETAILS

L-858 OR L-858(L) SIGN

NOTES:
SEE AIRFIELD LIGHTING NOTES AND SCHEDULES SHEET FOR SIGN LEGEND, LOCATION, TYPE, SIZE, STYLE, AND CLASS.

NUMBER AND SPACING OF LEGS AS PER MANUFACTURER'S REQUIREMENTS.

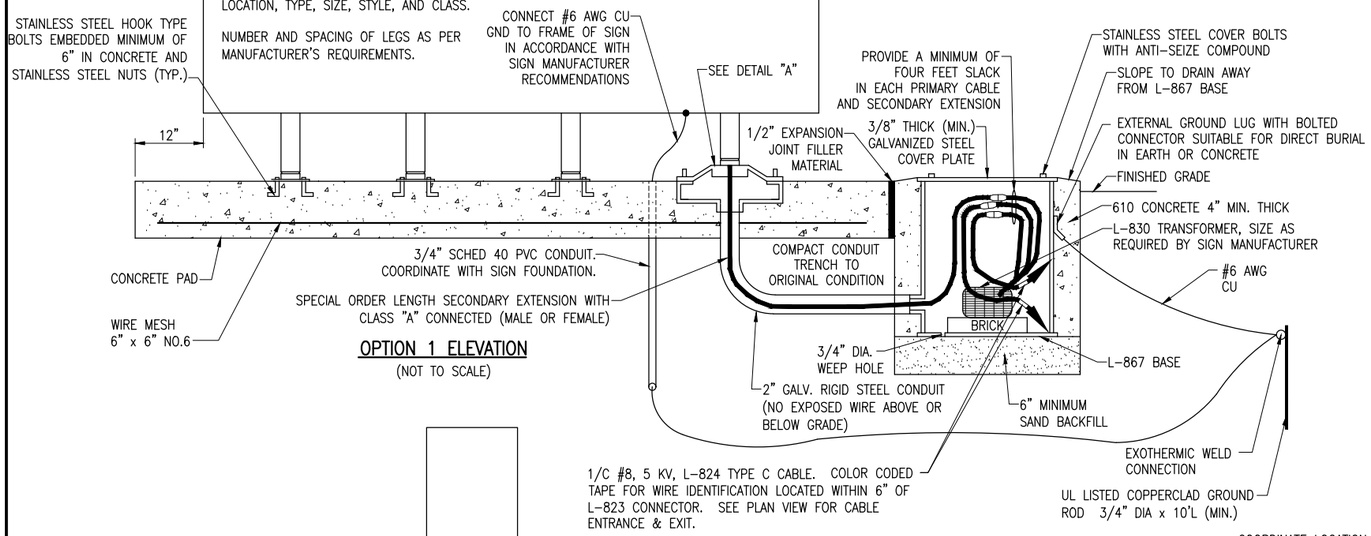

OPTION 1 ELEVATION
(NOT TO SCALE)

① EXISTING SOD TO BE STRIPPED AND REMOVED

② SAND BACKFILL, VARIABLE DEPTH

③ PROPOSED TOPSOIL BACKFILL MATERIAL

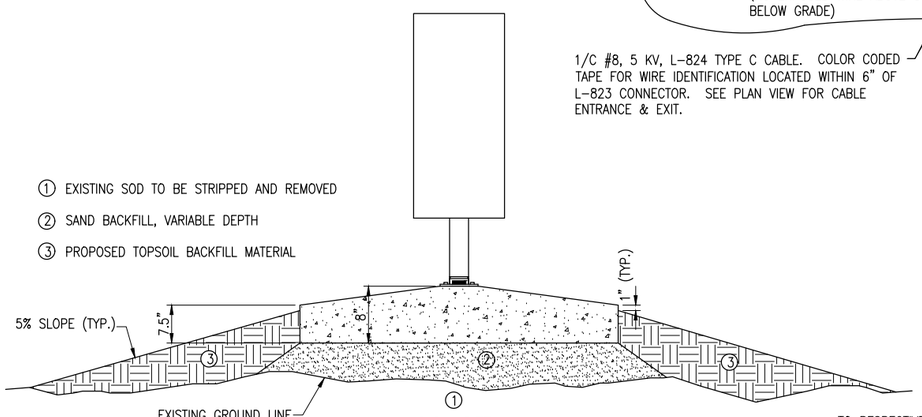

SIGN DETAIL
(NOT TO SCALE)

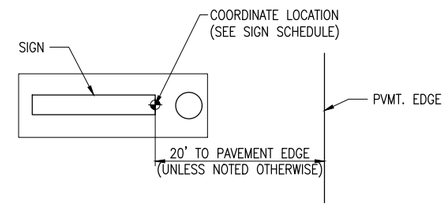

SIGN COORDINATE LOCATION
(NOT TO SCALE)

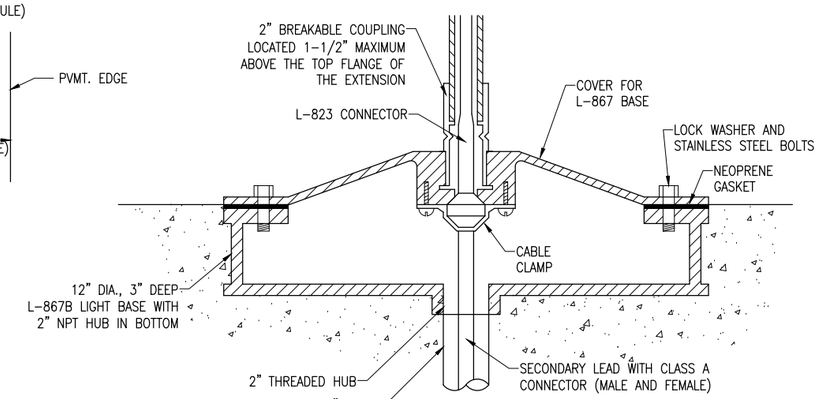

DETAIL "A"
(NOT TO SCALE)

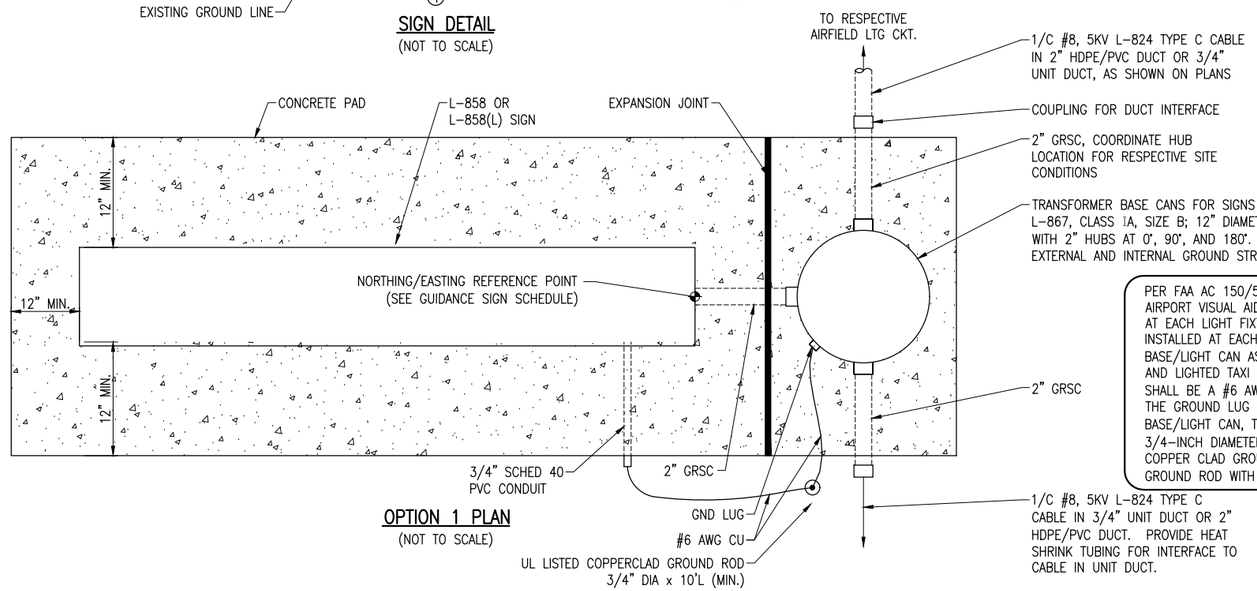

OPTION 1 PLAN
(NOT TO SCALE)

PER FAA AC 150/5340-30H DESIGN AND INSTALLATION DETAILS FOR AIRPORT VISUAL AIDS, A LIGHT BASE GROUND MUST BE INSTALLED AT EACH LIGHT FIXTURE. A LIGHT BASE GROUND SHALL BE INSTALLED AT EACH STAKE MOUNTED LIGHT AND EACH TRANSFORMER BASE/LIGHT CAN ASSOCIATED WITH RUNWAY LIGHTS, TAXIWAY LIGHTS, AND LIGHTED TAXI GUIDANCE SIGNS. THE LIGHT BASE GROUND SHALL BE A #6 AWG BARE COPPER CONDUCTOR CONNECTED TO THE GROUND LUG ON THE RESPECTIVE L-867 TRANSFORMER BASE/LIGHT CAN, TAXI SIGN FRAME, OR MOUNTING STAKE AND A 3/4-INCH DIAMETER BY 10-FOOT LONG (MINIMUM) UL LISTED COPPER CLAD GROUND ROD. ALSO BOND THE SIGN FRAME TO THE GROUND ROD WITH A #6 AWG BARE COPPER CONDUCTOR.

GENERAL NOTES

1. SEE LIGHTING LAYOUT SHEETS, AIRFIELD LIGHTING NOTES AND TAXI GUIDANCE SIGN SCHEDULES FOR SIGN LEGEND, LOCATION, TYPE, SIZE, STYLE, AND CLASS.
2. SEE ELECTRICAL NOTES SHEETS.

HANSON
Engineering | Planning | Allied Services

Offices Nationwide
www.hanson-inc.com

Hanson Professional Services Inc.
1525 S. 6th Street
Springfield, IL 62703
phone: 217-788-2450
fax: 217-788-2503

Illinois Licensed
Professional Service Corporation
#184-001084

ST. LOUIS DOWNTOWN AIRPORT
Bi-State Development Agency
6100 Archview Drive
Cahokia, IL 62206-1445

LICENSED PROFESSIONAL ENGINEER
KEVIN N. LIGHTFOOT
062-047643
STATE OF ILLINOIS

Kevin N. Lightfoot
6/6/2017
EXPIRES: 11/30/2017
COVERING
ELECTRICAL DESIGN

TAXIWAY B RELOCATION, PHASE 1:
FILLET IMPROVEMENTS

SBG No:
3-17-SBGP-133/134
IDA No: CPS-4505

Contract No. SD058

NO.	DATE	DESCRIPTION		
		DES	DWN	REV

ISSUE: JUNE 9, 2017
PROJECT NO: 16A0107
CAD FILE: E-502-ELEC.DWG
DESIGN BY: KNL 03/07/2017
DRAWN BY: CWS 03/08/2017
REVIEWED BY: BSS 03/23/17

SHEET TITLE

TAXI GUIDANCE SIGN DETAILS - SHEET 1

JUN 09, 2017 1:45 PM HERNDO1562
I:\16JOBS\16A0107\16A0107\CADAIRPORT\SHEETE-502-ELEC.DWG

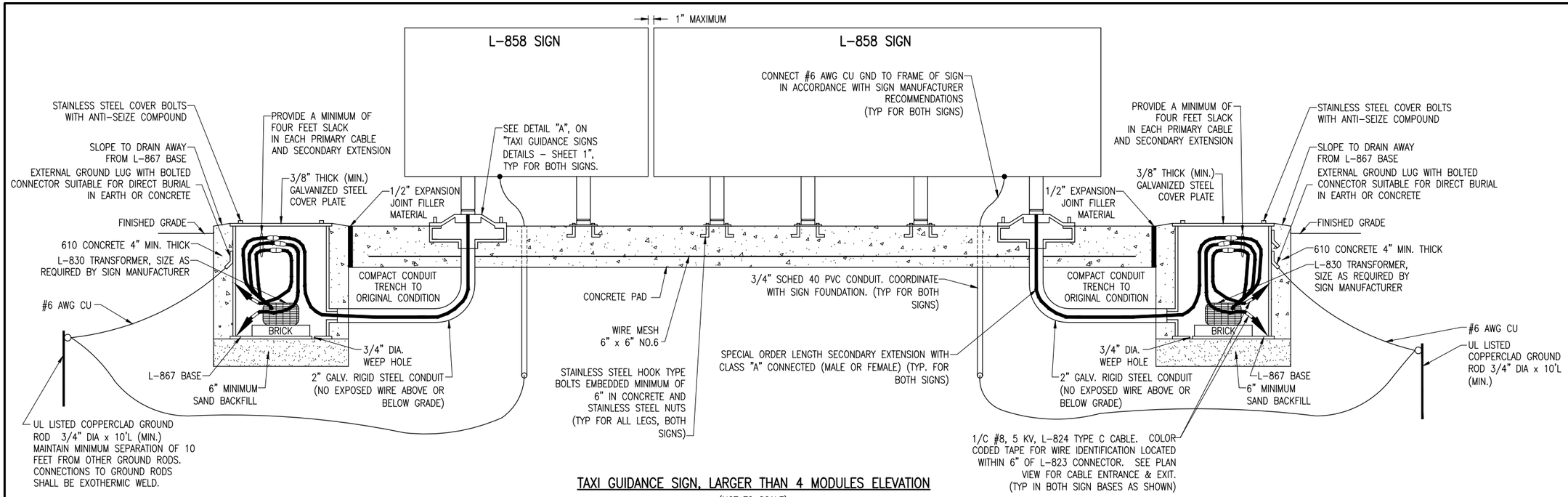

TAXI GUIDANCE SIGN, LARGER THAN 4 MODULES ELEVATION

(NOT TO SCALE)

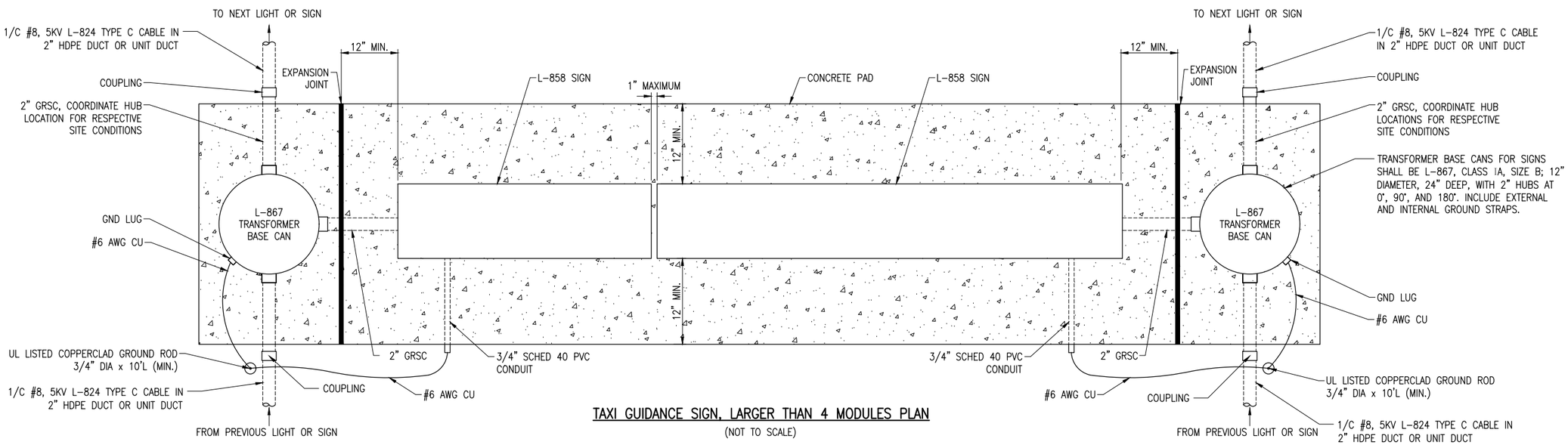

TAXI GUIDANCE SIGN, LARGER THAN 4 MODULES PLAN

(NOT TO SCALE)

GENERAL NOTES

1. SEE LIGHTING LAYOUT SHEET(S) FOR SIGN LEGEND, LOCATION, TYPE, SIZE, STYLE, CLASS, AND NUMBER OF MODULES.
2. NUMBER AND SPACING OF LEGS AS PER MANUFACTURER'S REQUIREMENTS.
3. COORDINATE PLACEMENT OF SIGNS AND ORIENTATION OF SIGNS WITH SIGN REFERENCE POINTS AS SHOWN IN THE PLANS.
4. RELOCATION OF A TAXI GUIDANCE SIGN LARGER THAN 4 MODULES WILL BE PAID AS 2 (QUANTITY OF 2) SIGN RELOCATIONS ITEM AR125964/AS125964 RELOCATE TAXI GUIDANCE SIGN.

PER FAA AC 150/5340-30H DESIGN AND INSTALLATION DETAILS FOR AIRPORT VISUAL AIDS, A LIGHT BASE GROUND MUST BE INSTALLED AT EACH LIGHT FIXTURE. A LIGHT BASE GROUND SHALL BE INSTALLED AT EACH STAKE MOUNTED LIGHT AND EACH TRANSFORMER BASE/LIGHT CAN ASSOCIATED WITH RUNWAY LIGHTS, TAXIWAY LIGHTS, AND LIGHTED TAXI GUIDANCE SIGNS. THE LIGHT BASE GROUND SHALL BE A #6 AWG BARE COPPER CONDUCTOR CONNECTED TO THE GROUND LUG ON THE RESPECTIVE L-867 TRANSFORMER BASE/LIGHT CAN, TAXI SIGN FRAME, OR MOUNTING STAKE AND A 3/4-INCH DIAMETER BY 10-FOOT LONG (MINIMUM) UL LISTED COPPER CLAD GROUND ROD.

HANSON
Engineering | Planning | Allied Services

Offices Nationwide
www.hanson-inc.com

Hanson Professional Services Inc.
1525 S. 6th Street
Springfield, IL 62703
phone: 217-788-2450
fax: 217-788-2503

Illinois Licensed
Professional Service Corporation
#184-001084

ST. LOUIS DOWNTOWN AIRPORT
Bi-State Development Agency
6100 Archview Drive
Cahokia, IL 62206-1445

LICENSED PROFESSIONAL ENGINEER
KEVIN N. LIGHTFOOT
062-047643
STATE OF ILLINOIS

Kevin N. Lightfoot
6/6/2017
EXPIRES: 11/30/2017
COVERING
ELECTRICAL DESIGN

TAXIWAY B RELOCATION, PHASE 1:
FILLET IMPROVEMENTS

SBG No:
3-17-SBGP-133/134
IDA No: CPS-4505

Contract No. SD058

NO.	DATE	DESCRIPTION		
		DES	DWN	REV

ISSUE: JUNE 9, 2017
PROJECT NO: 16A0107
CAD FILE: E-502-ELEC.DWG
DESIGN BY: KNL 03/18/2017
DRAWN BY: RAD 03/22/2017
REVIEWED BY: BSS 03/23/17

SHEET TITLE

TAXI GUIDANCE SIGN DETAILS - SHEET 2

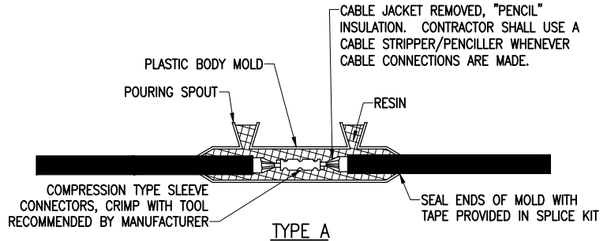

TYPE A

FOR SPLICES IN LOW VOLTAGE CABLE (600V) HOMERUNS FOR EXTENSIONS TO EXISTING LOW VOLTAGE CABLES ONLY. TYPE A SPLICES SHALL BE MADE IN SPLICE CANS, HANDHOLES, MANHOLES, OR JUNCTIONS BOXES

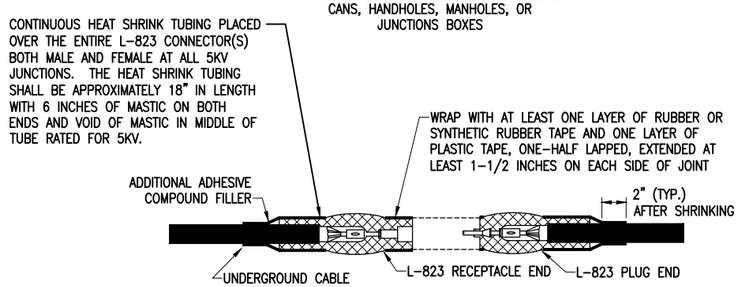

TYPE B

FOR SPLICES AT JUNCTION OF HOMERUN WITH LOOP CIRCUIT AND FOR SPLICES IN HOMERUNS TO EXISTING CABLES

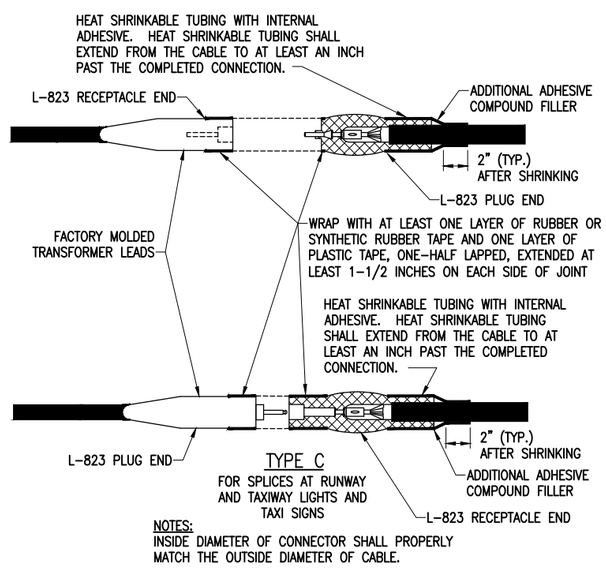

TYPE C

FOR SPLICES AT RUNWAY AND TAXIWAY LIGHTS AND TAXI SIGNS

NOTES:
INSIDE DIAMETER OF CONNECTOR SHALL PROPERLY MATCH THE OUTSIDE DIAMETER OF CABLE.

CABLE SPLICES
(NOT TO SCALE)

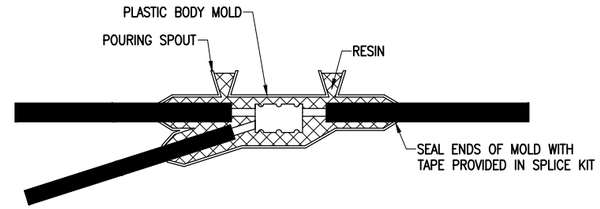

LOW VOLTAGE UNDERGROUND TAP SPLICE

FOR TAP SPLICES IN LOW VOLTAGE (600V) CABLE. SPLICES SHALL BE RATED AND LISTED SUITABLE FOR DIRECT BURIAL LOCATIONS. FOR SPLICES UP TO #2 AWG CONDUCTOR, SPLICES SHALL BE WYE RESIN TYPE POWER CABLE TAP SPLICE KIT SUITABLE FOR THE RESPECTIVE CABLES AND RESPECTIVE APPLICATION.

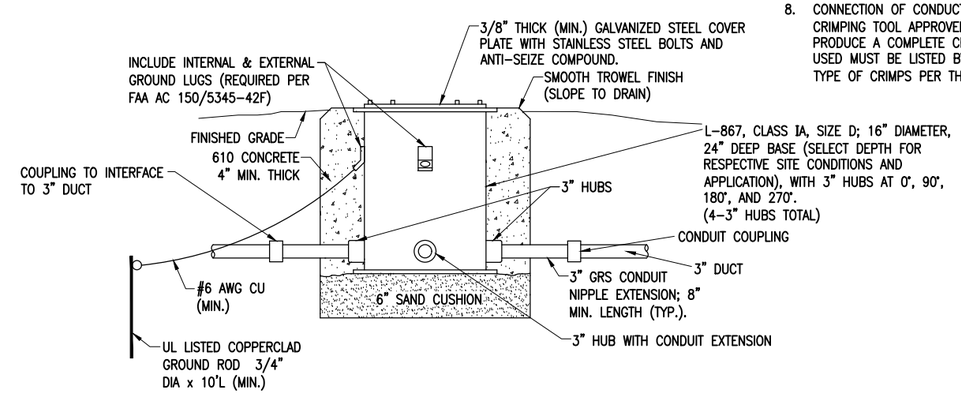

SPLICE CAN DETAIL
(NOT TO SCALE)

NOTES FOR SPLICE CAN DETAIL:

1. SPLICE CANS SHALL CONFORM TO THE REQUIREMENTS OF FAA AC 150/5345-42 (CURRENT ISSUES IN EFFECT), FOR TYPE L-867, CLASS IA, SIZE D, (16 IN. NOMINAL DIAMETER), AND 24 IN. DEEP AND/OR AS DETAILED ON THE PLANS. EACH SPLICE CAN SHALL INCLUDE INTERNAL AND EXTERNAL GROUND LUGS TO ACCOMMODATE THE RESPECTIVE APPLICATIONS. SPLICE CANS AND/OR JUNCTION CANS SHALL HAVE GALVANIZED STEEL COVERS, 3/8-INCH THICK (MINIMUM), WITH STAINLESS STEEL BOLTS.
2. FOR THE PURPOSE OF ENHANCING SAFETY, EACH BASE MUST HAVE INSTALLED, BY THE MANUFACTURER, AN INTERNAL AND EXTERNAL GROUND STRAP THAT IS AVAILABLE FOR THE PURPOSE OF ATTACHING A GROUND LUG THAT IS CONNECTED TO AN EARTH GROUND OR A SAFETY GROUND CONDUCTOR INSTALLED WITH THE RESPECTIVE CIRCUIT. FOR AIRPORT PROJECTS RECEIVING FEDERAL FUNDS THIS REQUIREMENT IS MANDATORY PER FAA AC 150/5345-42 (CURRENT ISSUES IN EFFECT).
3. APPLY AN OXIDE-INHIBITING, ANTI-SEIZING COMPOUND TO ALL SCREWS, NUTS, AND ALL PLACES WHERE METAL COMES INTO CONTACT WITH METAL.
4. THE CONCRETE USED IN THE CONSTRUCTION OF THE BASES FOR THE AIRFIELD LIGHTING CANS SHALL BE IN ACCORDANCE WITH ITEM 610 STRUCTURAL PORTLAND CEMENT CONCRETE.
5. LIDS FOR THE SPLICE CANS CONTAINING HIGH VOLTAGE AIRFIELD LIGHTING CABLES SHALL INCLUDE MINIMUM 1/2-INCH HIGH LETTERING LABELED "DANGER HIGH VOLTAGE KEEP OUT" TO COMPLY WITH NEC ARTICLE 300.45 "WARNING SIGNS" AND NEC ARTICLE 314.71(E) "SUITABLE COVERS". THIS WILL NEED TO BE COORDINATED WITH THE SPLICE CAN MANUFACTURER.
6. LIDS FOR THE SPLICE CANS CONTAINING LOW VOLTAGE CABLES (RATED 600 VOLTS AND BELOW) WILL BE ACCEPTABLE TO USE BLANK COVERS.

NOTES:

1. SPLICE DETAILS ARE PROVIDED FOR NEW WORK AND TO ASSIST IN REPAIRS OF ACCIDENTAL OR UNEXPECTED INTERRUPTIONS AND/OR CUTS TO AIRFIELD LIGHTING CABLES.
2. CONTRACTOR SHALL KEEP ON HAND A MINIMUM OF 10 SETS OF SPLICE KITS FOR L-823 CONNECTORS AND A MINIMUM OF 10 SETS OF TYPE A LOW VOLTAGE SPLICE KITS TO ACCOMMODATE REPAIRS.
3. EVERY AIRFIELD LIGHTING CABLE SPLICER SHALL BE QUALIFIED IN MAKING CABLE SPLICES AND TERMINATIONS ON CABLES RATED AT AND/OR ABOVE 5,000 VOLTS AC TO COMPLY WITH THE REQUIREMENTS OF FAA 150/5370G-10G ITEM L-108.
4. WHEN PREPARING CABLE FOR SPLICES, THE CONTRACTOR SHALL USE A CABLE STRIPPER/PENCILLER WHENEVER CABLE CONNECTIONS ARE MADE.
5. INSIDE DIAMETER OF RESPECTIVE CABLE CONNECTOR SHALL PROPERLY MATCH OUTSIDE DIAMETER OF CABLE.
6. WRAP ALL PRIMARY AND SECONDARY POWER CONNECTIONS WITH SUFFICIENT LAYERS OF HIGH VOLTAGE ELECTRICAL INSULATING TAPE (RUBBER SPLICING TAPE SUITABLE FOR PRIMARY ELECTRICAL INSULATION FOR SPLICING CABLE FROM 600 VOLTS TO 69,000 VOLTS) AND COVER WITH VINYL ELECTRICAL TAPE (ALL-WEATHER VINYL INSULATING TAPE SUITABLE FOR PROTECTIVE JACKETING FOR HIGH-VOLTAGE CABLE SPLICES AND REPAIRS) FOR FULL VALUE OF CABLE INSULATION VOLTAGE. PER ILLINOIS STANDARD SPECIFICATIONS FOR CONSTRUCTION OF AIRPORTS ITEM 108 AND FAA AC 150/5370-10G ITEM L-108, HIGH VOLTAGE ELECTRICAL INSULATING TAPE SHALL BE 3M SCOTCH 23, 3M SCOTCH 130C OR APPROVED EQUIVALENT, AND VINYL ELECTRICAL TAPE SHALL BE 3M SCOTCH 88 OR APPROVED EQUIVALENT. TAPES MUST BE RATED SUITABLE FOR THE APPLICATION.
7. PROVIDE CABLE TAGS TO IDENTIFY THE RESPECTIVE CIRCUITS ALL POINTS OF ACCESS INCLUDING L-867 BASES, L-868 BASES, HANDHOLES, MANHOLES, JUNCTION BOXES, AND WIREWAYS.
8. CONNECTION OF CONDUCTORS MUST BE MADE BY USING CRIMP CONNECTORS AND A CRIMPING TOOL APPROVED BY THE CONNECTOR/LUG MANUFACTURER. THE TOOL MUST PRODUCE A COMPLETE CRIMP BEFORE IT CAN BE REMOVED. THE CRIMPING TOOL USED MUST BE LISTED BY THE L-823 KIT MANUFACTURER. MAKE THE NUMBER AND TYPE OF CRIMPS PER THE KIT MANUFACTURER'S INSTRUCTIONS.

HANSON
Engineering | Planning | Allied Services
Offices Nationwide
www.hanson-inc.com

Hanson Professional Services Inc.
1525 S. 6th Street
Springfield, IL 62703
phone: 217-788-2450
fax: 217-788-2503

Illinois Licensed
Professional Service Corporation
#184-001084

ST. LOUIS
DOWNTOWN AIRPORT
Bi-State Development Agency
6100 Archview Drive
Cahokia, IL 62206-1445

LICENSED PROFESSIONAL ENGINEER
KEVIN N. LIGHTFOOT
062-047643
STATE OF ILLINOIS

Kevin N. Lightfoot
6/6/2017
EXPIRES: 11/30/2017
COVERING
ELECTRICAL DESIGN

TAXIWAY B RELOCATION, PHASE 1:
FILLET IMPROVEMENTS

SBG No:
3-17-SBGP-133/134
IDA No: CPS-4505

Contract No. SD058

NO.	DATE	DESCRIPTION		
		DES	DWN	REV

ISSUE: JUNE 9, 2017
PROJECT NO: 16A0107
CAD FILE: E-503-ELEC.DWG
DESIGN BY: KNL 03/18/2017
DRAWN BY: RAD 03/22/2017
REVIEWED BY: BSS 03/23/17

SHEET TITLE

AIRFIELD LIGHTING CABLE SPLICE DETAILS

JUN 09, 2017 1:45 PM HERND01562
I:\16JOBS\16A0107\16A0107D\CAD\AIRPORT\SHEETS\E-503-ELEC.DWG

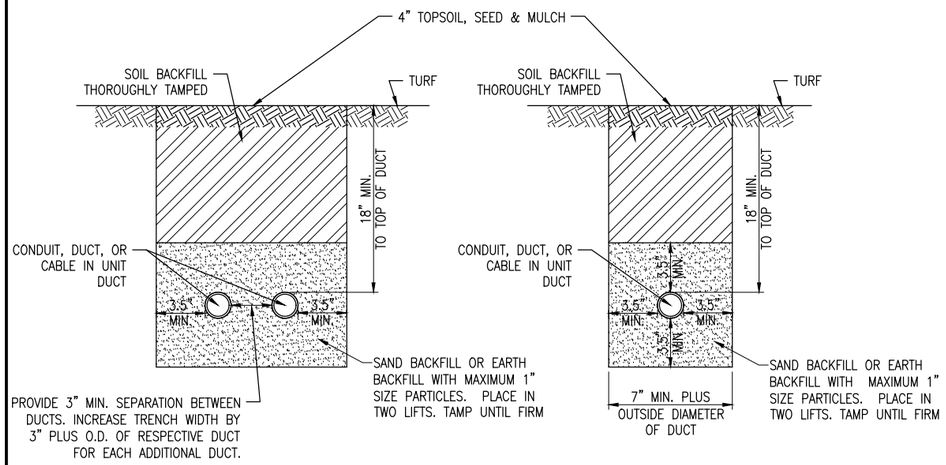

CONDUIT IN TRENCH – NON–PAVEMENT AREAS

"NOT TO SCALE"

NOTES:

1. DIMENSIONS FOR COVERAGE AND SEPARATION BETWEEN DUCTS ARE MINIMUM.
2. TRENCHES WITH MORE THAN TWO DUCTS OR CABLE IN UNIT DUCTS SHALL BE INCREASED 3" IN WIDTH PLUS DIAMETER OF RESPECTIVE DUCT FOR EACH ADDITIONAL CONDUIT, DUCT, OR CABLE IN UNIT DUCT; IF SPECIFIED ON PLANS TWO PARALLEL TRENCHES MAY BE CONSTRUCTED.
3. DEPTH OF TRENCHES SHALL BE AS SHOWN ABOVE UNLESS OTHERWISE SPECIFIED ON THE PLANS. MINIMUM COVER REQUIREMENTS FOR CABLES AND DUCTS AT AIRPORT RUNWAYS AND ADJACENT AREAS WHERE TRESPASSING IS PROHIBITED IS 18 INCHES PER NEC 300.5 AND 300.50. MINIMUM COVER REQUIREMENTS FOR DUCTS LOCATED BELOW PAVEMENT OR ROADWAYS IS 30". COVER IS DEFINED AS THE SHORTEST DISTANCE IN INCHES MEASURED BETWEEN A POINT ON THE TOP SURFACE OF ANY DIRECT–BURIED CONDUCTOR, CABLE, CONDUIT, OR OTHER RACEWAY AND THE TOP SURFACE OF FINISHED GRADE, CONCRETE OR SIMILAR COVER.
4. HIGH VOLTAGE CIRCUITS (AIRFIELD LIGHTING 5000 VOLT SERIES CIRCUITS AND/OR OTHER CIRCUITS RATED ABOVE 600 VOLTS) AND LOW VOLTAGE CIRCUITS (RATED 600 VOLTS AND BELOW) SHALL NOT BE INSTALLED IN THE SAME RACEWAY, CONDUIT, DUCT, HANDHOLE, OR MANHOLE.
5. CONDUIT, DUCT, CABLE, AND/OR CABLE IN UNIT DUCT INTERFACE TO HANDHOLES, MANHOLES, SPLICE CANS, OR OTHER JUNCTION STRUCTURES WILL BE CONSIDERED INCIDENTAL TO THE RESPECTIVE CABLE PAY ITEM OR RESPECTIVE DUCT PAY ITEM.
6. ALL DISTURBED SURFACES SHALL BE RESTORED TO THEIR ORIGINAL CONDITION. COST IS INCIDENTAL TO TRENCH.

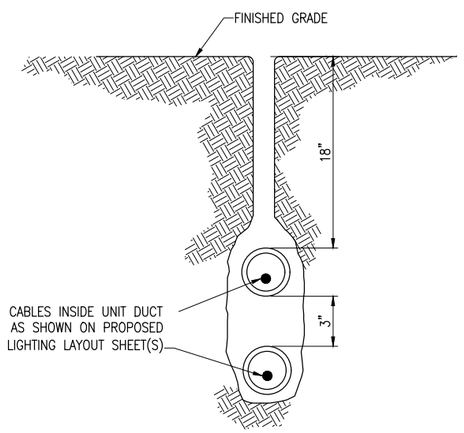

PLOWED CABLE

(NOT TO SCALE)

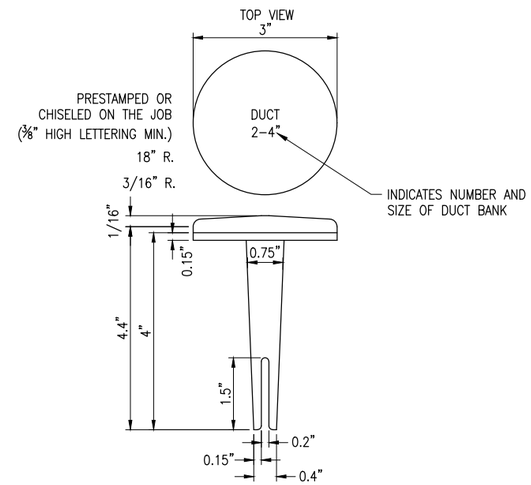

BITUMINOUS PAVEMENT DUCT MARKERS

"NOT TO SCALE"

NOTES:

1. TOP OF MARKER SHALL BE FLUSH WITH FINISHED PAVEMENT SURFACE. MARKER MAY BE INSTALLED IN A DRILLED HOLE AND SECURED WITH EPOXY GLUE.
2. BRASS DUCT MARKERS ARE AVAILABLE FROM G&S FOUNDRY & MANUFACTURING CO., INC., 210 KASKASKIA DRIVE, RED BUD, IL 62278, PHONE: (618)–282–4114, SURV–KAP, 3225 E. 47TH ST., TUCSON, AZ 85713, PHONE: (520) 622–6011, OR OTHER EQUIVALENT MANUFACTURERS.

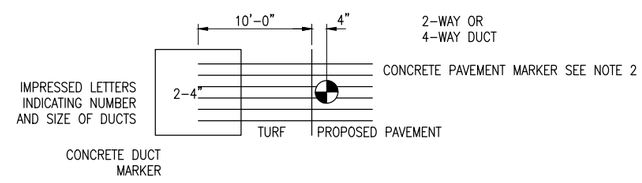

DUCT MARKER DETAIL

"NOT TO SCALE"

CABLE & DUCT MARKER NOTES:

1. THE COST OF ALL TURF AND PAVEMENT DUCT MARKERS SHALL BE INCIDENTAL TO THE DUCT. THE COST OF ALL CABLE MARKERS SHALL BE INCIDENTAL TO THE CABLE.
2. BITUMINOUS PAVEMENT DUCT MARKER AND CONCRETE DUCT MARKER TO BE PROVIDED AT EACH END OF EACH DUCT AS SHOWN ON THE LOCATION PLAN. FOR CONCRETE PAVEMENT, THE LETTER "D" SHALL BE IMPRESSED IN THE PAVEMENT INSTEAD OF THE MARKER. THE LETTER SHALL BE FORMED AS DESCRIBED IN NOTE 4.
3. CABLE MARKERS SHALL BE PLACED AT CHANGES OF DIRECTION AND APPROXIMATELY EVERY 200' ALONG CABLE RUNS.
4. CONCRETE CABLE MARKERS AND DUCT MARKERS SHALL HAVE LETTERS 4" HIGH, 3" WIDE WITH WIDTH OF STROKE ½" AND ¼" DEEP. ALL LETTERS, NUMBERS AND ARROWS TO BE IMPRESSED.
5. EMPLOY THE FOLLOWING METHODS WERE ADDITIONAL SPACE TO FIT LEGEND IS REQUIRED:
   A. REDUCE LETTER SIZE TO 3" HIGH, 2" WIDE.
   B. INCREASE THE MARKER SIZE TO 30" X 30".
   C. PROVIDE ADDITIONAL MARKERS PLACED SIDE BY SIDE.

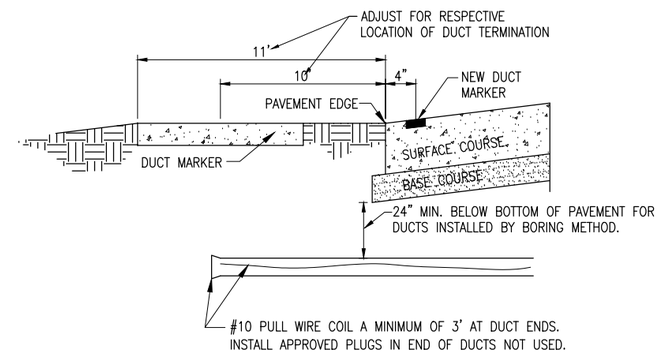

UNDERGROUND ELECTRICAL DUCT

(NOT TO SCALE)

NOTE: DUCTS INSTALLED BY BORING METHOD SHALL NOT DISTURB THE RESPECTIVE PAVEMENT SURFACE.

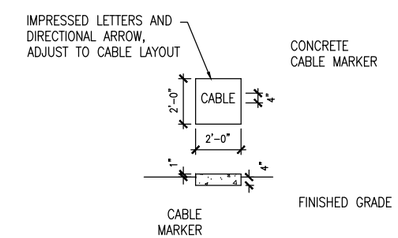

TURF CABLE MARKERS

"NOT TO SCALE"

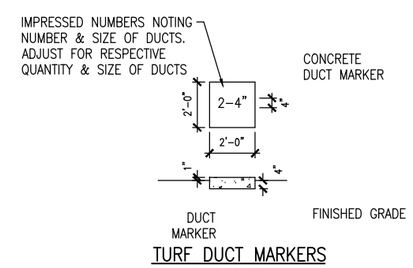

TURF DUCT MARKERS

"NOT TO SCALE"

HANSON
Engineering | Planning | Allied Services

Offices Nationwide
www.hanson-inc.com

Hanson Professional Services Inc.
1525 S. 6th Street
Springfield, IL 62703
phone: 217-788-2450
fax: 217-788-2503

Illinois Licensed
Professional Service Corporation
#184-001084

ST. LOUIS DOWNTOWN AIRPORT
Bi-State Development Agency
6100 Archview Drive
Cahokia, IL 62206-1445

LICENSED PROFESSIONAL ENGINEER
KEVIN N. LIGHTFOOT
062-047643
STATE OF ILLINOIS

Kevin N. Lightfoot
6/6/2017
EXPIRES: 11/30/2017
COVERING ELECTRICAL DESIGN

TAXIWAY B RELOCATION, PHASE 1:
FILLET IMPROVEMENTS

SBG No:
3-17-SBGP-133/134
IDA No: CPS-4505

Contract No. SD058

NO.	DATE	DESCRIPTION		
		DES	DWN	REV

ISSUE: JUNE 9, 2017
PROJECT NO: 16A0107
CAD FILE: E-504-ELEC.DWG
DESIGN BY: KNL 03/18/2017
DRAWN BY: RAD 03/22/2017
REVIEWED BY: BSS 03/23/17

SHEET TITLE

CONDUIT TRENCH DETAILS

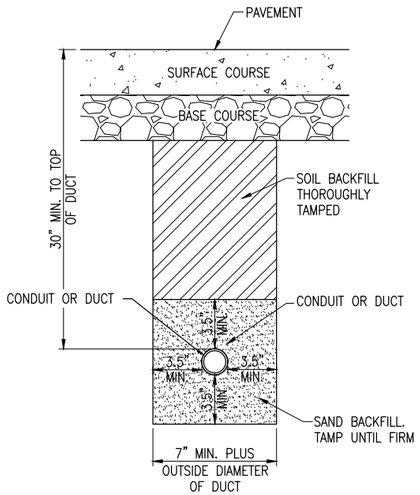

CONDUIT IN TRENCH – PAVEMENT AREAS

"NOT TO SCALE"

NOTES:

1. DIMENSIONS FOR COVERAGE AND SEPARATION BETWEEN DUCTS ARE MINIMUM.
2. TRENCHES WITH MORE THAN TWO CONDUITS OR DUCTS SHALL BE INCREASED 3" IN WIDTH PLUS DIAMETER OF RESPECTIVE DUCT FOR EACH ADDITIONAL CONDUIT, OR DUCT; IF SPECIFIED ON PLANS TWO PARALLEL TRENCHES MAY BE CONSTRUCTED.
3. DEPTH OF TRENCHES SHALL BE AS SHOWN ABOVE UNLESS OTHERWISE SPECIFIED ON THE PLANS. MINIMUM COVER REQUIREMENTS FOR DUCTS LOCATED IN TURF AREAS IS 18". MINIMUM COVER REQUIREMENTS FOR DUCTS LOCATED BELOW PAVEMENT IS 30". MINIMUM COVER REQUIREMENTS FOR DUCTS LOCATED IN AREAS SUBJECT TO FARMING IS 42". COVER IS DEFINED AS THE SHORTEST DISTANCE IN INCHES MEASURED BETWEEN A POINT ON THE TOP SURFACE OF ANY DIRECT–BURIED CONDUCTOR, CABLE, CONDUIT, OR OTHER RACEWAY AND THE TOP SURFACE OF FINISHED GRADE, CONCRETE OR SIMILAR COVER.
4. HIGH VOLTAGE CIRCUITS (AIRFIELD LIGHTING 5000 VOLT SERIES CIRCUITS AND/OR OTHER CIRCUITS RATED ABOVE 600 VOLTS) AND LOW VOLTAGE CIRCUITS (RATED 600 VOLTS AND BELOW) SHALL NOT BE INSTALLED IN THE SAME RACEWAY, CONDUIT, DUCT, HANDHOLE, OR MANHOLE.
5. DUCT AND CONDUIT INTERFACE TO HANDHOLES OR MANHOLES WILL BE CONSIDERED INCIDENTAL TO THE RESPECTIVE DUCT WORK.
6. ALL DISTURBED SURFACES SHALL BE RESTORED TO THEIR ORIGINAL CONDITION. COST IS INCIDENTAL TO TRENCH.

DUCT INSTALLATION NOTES

1. ALL ELECTRICAL EQUIPMENT AND MATERIALS SHALL BE INSTALLED IN CONFORMANCE WITH NFPA 70 – NATIONAL ELECTRICAL CODE (NEC) MOST CURRENT ISSUE IN FORCE, THE RESPECTIVE EQUIPMENT MANUFACTURER'S DIRECTIONS AND ALL OTHER APPLICABLE LOCAL CODES, LAWS, ORDINANCES, AND REQUIREMENTS IN FORCE. ANY INSTALLATIONS WHICH VOID THE U.L. LISTING, INTERTEK TESTING SERVICES VERIFICATION/LISTING (OR OTHER THIRD PARTY LISTING) AND/OR THE MANUFACTURER'S WARRANTY OF A DEVICE WILL NOT BE PERMITTED.
2. CONTRACTOR SHALL KEEP A COPY OF THE LATEST NEC IN FORCE ON SITE AT ALL TIMES DURING CONSTRUCTION FOR USE AS A REFERENCE.
3. CONTRACTOR SHALL COORDINATE WORK AND ANY POWER OUTAGES AND/OR SHUT DOWN OF SYSTEMS WITH THE RESPECTIVE FACILITY OWNER PERSONNEL AND THE AIRPORT MANAGER/DIRECTOR. ONCE SHUT DOWN, THE CIRCUITS SHALL BE LABELED AS SUCH TO PREVENT ACCIDENTAL ENERGIZING OF THE RESPECTIVE CIRCUITS. ALL PERSONNEL SHALL FOLLOW U.S. DEPARTMENT OF LABOR OCCUPATIONAL SAFETY & HEALTH ADMINISTRATION (OSHA) 29 CFR PART 1910 OCCUPATIONAL SAFETY & HEALTH STANDARDS FOR ELECTRICAL SAFETY AND LOCKOUT/TAGOUT PROCEDURES INCLUDING, BUT NOT LIMITED TO, 29 CFR SECTION 1910.147 THE CONTROL OF HAZARDOUS ENERGY (LOCKOUT/TAGOUT).
4. THE LOCATION, SIZE AND TYPE OF MATERIAL OF EXISTING UNDERGROUND AND/OR ABOVEGROUND UTILITIES INDICATED ON THE PLANS IS NOT REPRESENTED AS BEING ACCURATE, SUFFICIENT OR COMPLETE. NEITHER THE OWNER NOR THE ENGINEER ASSUMES ANY RESPONSIBILITY WHATEVER IN RESPECT TO ACCURACY, COMPLETENESS, OR SUFFICIENCY OF THE INFORMATION. THERE IS NO GUARANTEE EITHER EXPRESSED OR IMPLIED, THAT THE LOCATIONS, SIZE AND TYPE OF MATERIAL OF EXISTING UNDERGROUND UTILITIES INDICATED ARE REPRESENTATIVE OF THOSE TO BE ENCOUNTERED IN THE CONSTRUCTION. IT SHALL BE THE CONTRACTOR'S RESPONSIBILITY TO DETERMINE THE ACTUAL LOCATION OF ALL SUCH FACILITIES, INCLUDING SERVICE CONNECTIONS TO UNDERGROUND UTILITIES. PRIOR TO CONSTRUCTION, THE CONTRACTOR SHALL NOTIFY THE UTILITY COMPANIES OF HIS OPERATIONAL PLANS AND SHALL OBTAIN FROM THE RESPECTIVE UTILITY COMPANIES DETAILED INFORMATION AND ASSISTANCE RELATIVE TO THE LOCATION OF THEIR FACILITIES AND THE WORKING SCHEDULE OF THE COMPANIES FOR REMOVAL OR ADJUSTMENT WHERE REQUIRED. IN THE EVENT AN UNEXPECTED UTILITY INTERFERENCE IS ENCOUNTERED DURING CONSTRUCTION, THE CONTRACTOR SHALL IMMEDIATELY NOTIFY THE UTILITY COMPANY OF JURISDICTION. THE OWNER'S REPRESENTATIVE AND/OR THE RESIDENT ENGINEER SHALL ALSO BE IMMEDIATELY NOTIFIED. ANY DAMAGE TO SUCH MAINS AND SERVICES SHALL BE RESTORED TO SERVICE AT ONCE AND PAID FOR BY THE CONTRACTOR AT NO ADDITIONAL COST TO THE CONTRACT. ALL UTILITY CABLES AND LINES SHALL BE LOCATED BY THE RESPECTIVE UTILITY. CONTACT JULIE (JOINT UTILITY LOCATION INFORMATION FOR EXCAVATORS) FOR UTILITY INFORMATION, PHONE: 1–800–892–0123. CONTACT THE FAA (FEDERAL AVIATION ADMINISTRATION) FOR ASSISTANCE IN LOCATING FAA CABLES AND UTILITIES. ALSO CONTACT AIRPORT DIRECTOR/MANAGER AND AIRPORT PERSONNEL FOR ASSISTANCE IN LOCATING UNDERGROUND AIRPORT CABLES AND/OR UTILITIES. ALSO COORDINATE WORK WITH ALL ABOVEGROUND UTILITIES.
5. ADJUSTMENTS TO DUCT BANK ROUTES MIGHT BE REQUIRED TO ACCOMMODATE EXISTING SITE CONDITIONS AND UNDERGROUND LINES AND UTILITIES. CONTRACTOR SHALL FIELD VERIFY EXISTING SITE CONDITIONS. CONTRACTOR SHALL COORDINATE DUCT ROUTE ADJUSTMENTS WITH THE RESIDENT ENGINEER/ RESIDENT PROJECT REPRESENTATIVE AND THE AIRPORT MANAGER.
6. CONTRACTOR SHALL LOCATE AND MARK ALL EXISTING CABLES, LINES, OR UTILITIES WITHIN 10 FT OF PROPOSED EXCAVATING/TRENCHING AREA. ANY CABLES, LINES, AND UTILITIES FOUND INTERFERING WITH PROPOSED EXCAVATION OR CABLE/TRENCHING SHALL BE HAND DUG AND EXPOSED. ANY DAMAGED CABLES OR OTHER UTILITIES SHALL BE IMMEDIATELY REPAIRED TO THE SATISFACTION OF THE RESIDENT ENGINEER/RESIDENT PROJECT REPRESENTATIVE AT THE CONTRACTOR'S EXPENSE. THE RESIDENT ENGINEER/RESIDENT PROJECT REPRESENTATIVE AND OWNER SHALL BE NOTIFIED IMMEDIATELY IF ANY CABLES OR OTHER UTILITIES ARE DAMAGED.
7. PAYMENT FOR LOCATING AND MARKING UNDERGROUND UTILITIES AND CABLES WILL NOT BE PAID FOR SEPARATELY, BUT SHALL BE CONSIDERED INCIDENTAL TO THE RESPECTIVE DUCT INSTALLATION.
8. THE CONTRACTOR WILL DETERMINE IF THERE IS A CONFLICT BETWEEN THE INSTALLATION OF THE PROPOSED ELECTRICAL DUCTS AND ANY EXISTING UTILITIES. HE WILL MAKE ALL NECESSARY ADJUSTMENTS IN DEPTH OF INSTALLATION TO AVOID ANY AND ALL PROPOSED/EXISTING UNDERGROUND IMPROVEMENTS.
9. CONDUITS FOR CONCRETE ENCASED DUCT BANK SHALL BE SCHEDULE 40 PVC CONDUIT, UL–LISTED, RATED FOR 90°C CABLE–CONFORMING TO NEMA STANDARD TC–2 AND UL 651, LISTED SUITABLE FOR UNDERGROUND USE EITHER DIRECT–BURIED OR ENCASED IN CONCRETE, OR SCHEDULE 40 (MINIMUM) HDPE CONDUIT, UL LISTED, CONFORMING TO NEMA STANDARD TC–7 AND UL 651B AND LISTED SUITABLE FOR UNDERGROUND USE; EITHER DIRECT BURY OR ENCASED IN CONCRETE.
10. CONDUITS FOR DIRECTIONAL BORING SHALL BE SCHEDULE 40 PVC CONDUIT OR SCHEDULE 80 PVC CONDUIT, UL–LISTED, RATED FOR 90°C CABLE–CONFORMING TO NEMA STANDARD TC–2 AND UL 651 AND SUITABLE FOR DIRECTIONAL BORING INSTALLATION, SCHEDULE 80 HDPE CONDUIT, UL–LISTED, CONFORMING TO NEMA STANDARD TC–7 AND UL 651B AND SUITABLE FOR DIRECTIONAL BORING INSTALLATION, OR WALL TYPE SDR 13.5 OR SDR 11 HDPE CONDUIT MANUFACTURED IN ACCORDANCE WITH ASTM D–3350 (SPECIFICATION OF POLYETHYLENE PLASTICS PIPE AND FITTINGS MATERIALS) AND ASTM F2160 (STANDARD SPECIFICATION FOR SOLID WALL, HIGH–DENSITY POLYETHYLENE CONDUIT BASED ON CONTROLLED OUTSIDE DIAMETER), AND SUITABLE FOR DIRECTIONAL BORING INSTALLATION. PER NEC 300.5 (K), RACEWAYS INSTALLED USING DIRECTIONAL BORING EQUIPMENT SHALL BE APPROVED FOR THE PURPOSE.
11. INSTALLATION OF CONDUIT AND DUCTS SHALL CONFORM TO ITEM 110 AIRPORT UNDERGROUND ELECTRICAL DUCT BANKS AND CONDUITS.
12. DUCTS INSTALLED IN TRENCH SHALL BE INSTALLED 18 IN. MINIMUM BELOW GRADE IN TURF AREAS NOT SUBJECT TO FARMING. DUCTS LOCATED IN AREAS SUBJECT TO FARMING SHALL BE 42 IN. MINIMUM BELOW GRADE. MINIMUM DEPTH OF TOP OF DUCT ENCASEMENT SHALL BE 30" IN AREAS UNDER ROADWAYS. WHERE DETAILED ON THE PLANS OR WHERE REQUIRED TO AVOID OBSTRUCTIONS, DUCTS SHALL BE BURIED DEEPER.
13. WHERE CONCRETE–ENCASED DUCT INTERFACES TO AN ELECTRICAL HANDHOLE OR MANHOLE, THE CONCRETE ENCASEMENT SHALL BE INSTALLED UP TO THE RESPECTIVE HANDHOLE OR MANHOLE. PROVIDE BUSHINGS OR BELLS AT CONDUIT TERMINATIONS IN ELECTRICAL HANDHOLES OR MANHOLES.
14. UNDERGROUND DUCTS INSTALLED BY DIRECTIONAL–BORING METHOD SHALL BE INSTALLED IN A MANNER THAT WILL NOT DAMAGE ANY EXISTING UNDERGROUND UTILITIES, AND SHALL NOT DISTURB OR DAMAGE THE RESPECTIVE PAVEMENT OR ROADWAY SURFACE. DUCTS SHALL BE DIRECTIONAL–BORED AT THE LOCATIONS SHOWN ON THE CONSTRUCTION PLANS. THE DUCTS WILL BE BORED AT A MINIMUM DEPTH OF 42 IN. BELOW THE RESPECTIVE PAVEMENT IT IS BEING BORED UNDER.
15. A PULL WIRE SHALL BE INSTALLED IN EACH CONDUIT OR DUCT TO BE LEFT VACANT.
16. HIGH VOLTAGE CIRCUITS (AIRFIELD LIGHTING 5000 VOLT SERIES CIRCUITS AND/OR OTHER CIRCUITS RATED ABOVE 600 VOLTS) AND LOW VOLTAGE CIRCUITS (RATED 600 VOLTS AND BELOW) SHALL NOT BE INSTALLED IN THE SAME RACEWAY, CONDUIT, DUCT, HANDHOLE, OR MANHOLE.
17. CONTROL CABLES SHALL BE RUN IN SEPARATE DUCTS FROM POWER CABLES.
18. HOMERUN CABLES FOR A RESPECTIVE CIRCUIT SHALL BE INSTALLED IN THE SAME RACEWAY OR DUCT.
19. COORDINATE DUCT INTERFACE TO MANHOLES AND HANDHOLES. FIELD CUT OPENINGS FOR CONDUITS AND DUCTS TO INTERFACE TO MANHOLES AND/OR HANDHOLES. CUT WALL OF RESPECTIVE HANDHOLE OR MANHOLE WITH A TOOL DESIGNED FOR MATERIAL TO BE CUT. SIZE HOLES FOR RESPECTIVE DUCTS, CONDUITS, AND TERMINATION FITTINGS AND SEAL AROUND PENETRATIONS. ALL CORING, INTERFACE, CUTTING, AND SEALING WILL BE CONSIDERED INCIDENTAL TO THE RESPECTIVE DUCT INSTALLATION AND/OR RESPECTIVE HANDHOLE/MANHOLE INSTALLATION.
20. CONTRACTOR SHALL COORDINATE DUCT MARKING WITH AIRPORT.
21. ALL POWER AND CONTROL CABLES IN HANDHOLES, MANHOLES, AND JUNCTION BOXES SHALL BE TAGGED TO IDENTIFY THE RESPECTIVE CABLE. A MINIMUM OF TWO TAGS SHALL BE PROVIDED ON EACH CABLE IN A MANHOLE; ONE AT THE CABLE ENTRANCE AND ONE AT THE CABLE EXIT. CABLE TAGS SHALL BE STAMPED BRASS TAGS OR OTHER WEATHERPROOF/WATERPROOF CORROSION RESISTANT MATERIAL.

HANSON
Engineering | Planning | Allied Services
Offices Nationwide
www.hanson-inc.com

Hanson Professional Services Inc.
1525 S. 6th Street
Springfield, IL 62703
phone: 217-788-2450
fax: 217-788-2503

Illinois Licensed
Professional Service Corporation
#184-001084

ST. LOUIS
DOWNTOWN AIRPORT
Bi-State Development Agency
6100 Archview Drive
Cahokia, IL 62206-1445

LICENSED PROFESSIONAL ENGINEER
KEVIN N. LIGHTFOOT
062-047643
STATE OF ILLINOIS

Kevin N. Lightfoot
6/6/2017
EXPIRES: 11/30/2017
COVERING
ELECTRICAL DESIGN

TAXIWAY B RELOCATION, PHASE 1:
FILLET IMPROVEMENTS

SBG No:
3-17-SBGP-133/134
IDA No: CPS-4505

Contract No. SD058

NO.	DATE	DESCRIPTION		
		DES	DWN	REV

ISSUE: JUNE 9, 2017
PROJECT NO: 16A0107
CAD FILE: E-505-ELEC.DWG
DESIGN BY: KNL 03/18/2017
DRAWN BY: RAD 03/22/2017
REVIEWED BY: BSS 03/23/17

SHEET TITLE

DUCT DETAILS AND INSTALLATION NOTES

GENERAL NOTES

1. ALL ELECTRICAL EQUIPMENT SHALL BE INSTALLED IN CONFORMANCE WITH NFPA 70 – NATIONAL ELECTRICAL CODE (NEC) MOST CURRENT ISSUE IN FORCE, THE RESPECTIVE EQUIPMENT MANUFACTURER'S DIRECTIONS AND ALL OTHER APPLICABLE LOCAL CODES, LAWS, ORDINANCES, AND REQUIREMENTS IN FORCE. ANY INSTALLATIONS WHICH VOID THE U.L. LISTING, INTERTEK TESTING SERVICES VERIFICATION/ETL LISTING (OR OTHER THIRD PARTY LISTING) AND/OR THE MANUFACTURER'S WARRANTY OF A DEVICE WILL NOT BE PERMITTED.

2. CONTRACTOR SHALL KEEP A COPY OF THE LATEST NEC IN FORCE ON SITE AT ALL TIMES DURING CONSTRUCTION FOR USE AS A REFERENCE.

3. CONTRACTOR SHALL COORDINATE WORK AND ANY POWER OUTAGES AND/OR SHUT DOWN OF SYSTEMS WITH THE RESPECTIVE FACILITY OWNER PERSONNEL AND THE AIRPORT MANAGER/DIRECTOR. ONCE SHUT DOWN, THE CIRCUITS SHALL BE LABELED AS SUCH TO PREVENT ACCIDENTAL ENERGIZING OF THE RESPECTIVE CIRCUITS. ALL PERSONNEL SHALL FOLLOW U.S. DEPARTMENT OF LABOR OCCUPATIONAL SAFETY & HEALTH ADMINISTRATION (OSHA) 29 CFR PART 1910 OCCUPATIONAL SAFETY & HEALTH STANDARDS FOR ELECTRICAL SAFETY AND LOCKOUT/TAGOUT PROCEDURES INCLUDING, BUT NOT LIMITED TO, 29 CFR SECTION 1910.147 THE CONTROL OF HAZARDOUS ENERGY (LOCKOUT/TAGOUT).

4. THE CONTRACTOR SHALL ASCERTAIN THAT ALL LIGHTING SYSTEM COMPONENTS FURNISHED BY HIM, INCLUDING FAA APPROVED EQUIPMENT, ARE COMPATIBLE IN ALL RESPECTS WITH EACH OTHER AND THE REMAINDER OF THE NEW/EXISTING SYSTEM. ANY NONCOMPATIBLE COMPONENTS FURNISHED BY THIS CONTRACTOR SHALL BE REPLACED BY HIM AT NO ADDITIONAL COST TO THE AIRPORT SPONSOR WITH A SIMILAR UNIT, APPROVED BY THE ENGINEER (DIFFERENT MODEL OR DIFFERENT MANUFACTURER) THAT IS COMPATIBLE WITH THE REMAINDER OF THE AIRPORT LIGHTING SYSTEM.

5. IN CASE THE CONTRACTOR ELECTS TO FURNISH AND INSTALL AIRPORT LIGHTING EQUIPMENT REQUIRING ADDITIONAL WIRING, TRANSFORMERS, ADAPTORS, MOUNTINGS, ETC., TO THOSE SHOWN ON THE DRAWINGS AND/OR LISTED IN THE SPECIFICATION, ANY COST FOR THESE ITEMS SHALL BE INCIDENTAL TO THE EQUIPMENT COST.

6. THE CONTRACTOR INSTALLED EQUIPMENT (INCLUDING FAA APPROVED) SHALL NOT GENERATE ANY ELECTROMAGNETIC INTERFERENCE IN THE EXISTING AND/OR NEW COMMUNICATIONS, WEATHER, AIR NAVIGATION, AND AIR TRAFFIC CONTROL EQUIPMENT. ANY EQUIPMENT GENERATING SUCH INTERFERENCE SHALL BE REPLACED BY THE CONTRACTOR AT NO ADDITIONAL COST WITH THE EQUIPMENT MEETING THE APPLICABLE SPECIFICATIONS AND NOT GENERATING ANY INTERFERENCE.

7. WHEN A SPECIFIC TYPE, STYLE, CLASS, ETC. OF FAA APPROVED EQUIPMENT IS SPECIFIED ONLY THAT TYPE, STYLE, CLASS, WILL BE ACCEPTABLE, EVEN THOUGH EQUIPMENT OF OTHER TYPES STYLES, CLASSES, ETC. MAY BE APPROVED.

8. ANY AND ALL INSTRUCTIONS FROM THE RESIDENT ENGINEER/RESIDENT TECHNICIAN TO THE CONTRACTOR REGARDING CHANGE ORDERS, CHANGES IN OR DEVIATIONS FROM THE PLANS AND SPECIFICATIONS SHALL BE IN WRITING AND APPROVED BY THE ILLINOIS DEPARTMENT OF TRANSPORTATION DIVISION OF AERONAUTICS (IDA) WITH COPIES SENT TO THE AIRPORT SPONSOR AND IDA. THE CONTRACTOR SHALL NOT ACCEPT ANY VERBAL INSTRUCTIONS FROM THE RESIDENT ENGINEER/RESIDENT TECHNICIAN REGARDING ANY CHANGES FROM THE PLANS AND SPECIFICATIONS.

9. A MINIMUM OF THREE COPIES OF THE INSTRUCTION BOOK SHALL BE SUPPLIED WITH EACH DIFFERENT TYPE OF EQUIPMENT. THE BOOKS DESCRIBING A MORE SOPHISTICATED TYPE OF EQUIPMENT, SUCH AS REGULATORS, PAPI, REIL, ETC. AS A MINIMUM SHALL CONTAIN THE FOLLOWING:

   A. A DETAILED DESCRIPTION OF THE OVERALL EQUIPMENT AND ITS INDIVIDUAL COMPONENTS.

   B. THEORY OF OPERATION INCLUDING THE FUNCTION OF EACH COMPONENT.

   C. INSTALLATION INSTRUCTION.

   D. START–UP INSTRUCTIONS.

   E. PREVENTATIVE MAINTENANCE REQUIREMENTS.

   F. CHART FOR TROUBLE–SHOOTING.

   G. COMPLETE POWER AND CONTROL DETAILED WIRING DIAGRAM(S), SHOWING EACH CONDUCTOR/CONNECTION/COMPONENT – "BLACK" BOXES ARE NOT ACCEPTABLE. THE DIAGRAM OF THE NARRATIVE SHALL SHOW VOLTAGE/CURRENTS/WAVE SHAPES AT STRATEGIC LOCATIONS TO BE USED WHEN CHECKING AND/OR TROUBLE–SHOOTING THE EQUIPMENT. WHEN THE EQUIPMENT HAS SEVERAL MODES OF OPERATION, SUCH AS SEVERAL BRIGHTNESS STEPS, THESE PARAMETERS SHALL BE INDICATED FOR ALL DIFFERENT MODES.

   H. PARTS LIST WHICH WILL INCLUDE ALL MAJOR AND MINOR COMPONENTS SUCH AS RESISTORS, DIODES, ETC. IT SHALL INCLUDE A COMPLETE NOMENCLATURE OF EACH COMPONENT AND, IF APPLICABLE, THE NAME OF ITS MANUFACTURER AND THE CATALOG NUMBER.

   I. SAFETY INSTRUCTIONS.

POWER AND CONTROL NOTES

1. PROVIDE LEGEND PLATES FOR ALL ELECTRICAL EQUIPMENT TO IDENTIFY FUNCTION, CIRCUIT VOLTAGE AND PHASE. WHERE THE EQUIPMENT CONTAINS FUSES, ALSO IDENTIFY THE FUSE OR FUSE LINK AMPERE RATING. WHERE THE EQUIPMENT DOES NOT HAVE SUFFICIENT AREA TO INSTALL LEGEND PLATES, THE LEGEND PLATES SHALL BE INSTALLED ON THE WALL NEXT TO THE UNIT. LEGEND PLATES SHALL BE WEATHERPROOF ENGRAVED PLASTIC OR PHENOLIC MATERIAL, 1/4" HIGH BLACK LETTERS ON A WHITE BACKGROUND UNLESS NOTED OTHERWISE. SECURE WITH WEATHERPROOF ADHESIVE AND MACHINE SCREWS. FURNISH ADDITIONAL LEGEND PLATES WHERE REQUIRED BY CODE, FOR ADDITIONAL EQUIPMENT, AS DETAILED HEREIN ON THE PLANS, AND AS NOTED IN THE SPECIAL PROVISION SPECIFICATIONS.

2. COLOR CODE ALL PHASE WIRING BY THE USE OF COLORED WIRE INSULATION AND/OR COLORED TAPE. WHERE TAPE IS USED, THE WIRE INSULATION SHALL BE BLACK. BLACK AND RED SHALL BE USED FOR PHASE CONDUCTORS ON 120/240VAC SINGLE–PHASE, THREE WIRE SYSTEMS AND BLACK, ORANGE (FOR HIGH LEG) AND BLUE SHALL BE USED FOR PHASE CONDUCTORS ON 240/120VAC THREE–PHASE, FOUR WIRE SYSTEMS. NEUTRAL CONDUCTORS, SIZE NO. 6 AWG OR SMALLER, SHALL BE IDENTIFIED BY A CONTINUOUS WHITE OR NATURAL GRAY OUTER FINISH ALONG ITS ENTIRE LENGTH. NEUTRAL CONDUCTORS LARGER THAN NO. 6 AWG SHALL BE IDENTIFIED EITHER BY A CONTINUOUS WHITE OR NATURAL GRAY OUTER FINISH ALONG ITS ENTIRE LENGTH OR BY THE USE OF WHITE TAPE AT ITS TERMINATIONS AND INSIDE ACCESSIBLE WIREWAYS. INSULATED GROUND CONDUCTORS SHALL HAVE GREEN COLORED INSULATION FOR ALL CONDUCTOR SIZES (AWG OR KCMIL).

3. ALL BRANCH CIRCUIT CONDUCTORS CONNECTED TO A PARTICULAR PHASE SHALL BE IDENTIFIED WITH THE SAME COLOR. THE COLOR CODING SHALL BE EXTENDED TO THE POINT OF UTILIZATION.

4. IN CONTROL WIRING THE SAME COLOR SHALL BE USED THROUGHOUT THE SYSTEM FOR THE SAME FUNCTION, SUCH AS 10%, 30%, 100% BRIGHTNESS CONTROL, ETC.

5. LOW VOLTAGE (600 V.) AND HIGH VOLTAGE (5000 V.) CONDUCTORS SHALL BE INSTALLED IN SEPARATE WIREWAYS.

6. NEATLY LACE WIRING IN DISTRIBUTION PANELS, WIREWAYS, SWITCHES AND JUNCTION/PULL BOXES.

7. THE MINIMUM SIZE OF PULL/JUNCTION BOXES, REGARDLESS OF THE QUANTITY AND SIZE OF THE CONDUCTORS SHOWN, SHALL BE AS FOLLOWS:

   A. IN STRAIGHT PULLS THE LENGTH OF THE BOX SHALL NOT BE LESS THAN EIGHT TIMES THE TRADE DIAMETER OF THE LARGER CONDUIT. THE TOTAL AREA (INCLUDING THE CONDUIT CROSS–SECTIONAL AREA) OF A BOX END SHALL BE AT LEAST 3 TIMES GREATER THAN THE TOTAL TRADE CROSS–SECTIONAL AREA OF THE CONDUITS TERMINATING AT THE END.

   B. IN ANGLE PULLS OR 'U' PULLS THE DISTANCE BETWEEN EACH CONDUIT ENTRY INSIDE THE BOX AND THE OPPOSITE WALL OF THE BOX SHALL NOT BE LESS THAN SIX (6) TIMES THE TRADE DIAMETER OF THE LARGEST CONDUIT. THIS DISTANCE SHALL BE INCREASED FOR ADDITIONAL ENTRIES BY THE AMOUNT OF THE SUM OF THE DIAMETERS OF ALL OTHER CONDUIT ENTRIES ON THE SAME WALL AS THE BOX. THE DISTANCE BETWEEN CONDUIT ENTRIES ENCLOSING THE SAME CONDUCTOR SHALL NOT BE LESS THAN SIX TIMES THE TRADE DIAMETER OF THE LARGEST CONDUIT.

8. A RUN OF CONDUIT BETWEEN TERMINATIONS AT EQUIPMENT ENCLOSURES, SQUARE DUCTS AND PULL/JUNCTION BOXES, SHALL NOT CONTAIN MORE THAN THE EQUIVALENT OF FOUR QUARTER BENDS (360 DEGREES TOTAL), INCLUDING THOSE BENDS LOCATED IMMEDIATELY AT THE TERMINATIONS, CAST, CONDUIT TYPE OUTLETS SHALL NOT BE TREATED AS PULL/JUNCTION BOXES.

9. EQUIPMENT CABINETS SHALL NOT BE USED AS PULL/JUNCTION BOXES. ONLY WIRING TERMINATING AT THE EQUIPMENT SHALL BE BROUGHT INTO THESE ENCLOSURES.

10. SPLICES AND JUNCTION POINTS SHALL BE PERMITTED ONLY IN JUNCTION BOXES, DUCTS EQUIPPED WITH REMOVABLE COVERS, AND AT EASILY ACCESSIBLE LOCATIONS.

11. CIRCUIT BREAKERS IN POWER DISTRIBUTION PANEL(S) SHALL BE THERMAL–MAGNETIC MOLDED CASE, PERMANENT TRIP WITH 100 AMPERE, MINIMUM FRAME.

12. DUAL LUGS SHALL BE USED WHERE TWO (2) WIRES, SIZE NO. 6 OR LARGER, ARE TO BE CONNECTED TO THE SAME TERMINAL.

13. ALL INTERIOR WALL MOUNTED EQUIPMENT ENCLOSURES SHALL BE MOUNTED ON HOT DIPPED GALVANIZED STEEL STRUT SUPPORT, OR STAINLESS STEEL STRUT SUPPORT, WITH CORROSION RESISTANT HARDWARE.

14. SUPPORT FOR EXTERIOR MOUNTED EQUIPMENT SHALL USE HOT DIPPED GALVANIZED STEEL STRUT SUPPORT OR STAINLESS STEEL STRUT SUPPORT WITH STAINLESS STEEL HARDWARE. PROVIDE ZINC RICH PAINT APPLIED TO FIELD CUTS OF GALVANIZED STEEL SUPPORT TO MINIMIZE THE POTENTIAL FOR CORROSION PER THE RESPECTIVE STRUT SUPPORT MANUFACTURER'S RECOMMENDATIONS.

15. CONDUITS FOR ELECTRIC SERVICE ENTRANCE AND FEEDERS SHALL BE AS DETAILED HEREIN ON THE PLANS. WHERE GALVANIZED RIGID STEEL CONDUIT IS SPECIFIED IT SHALL HAVE THREADED FITTINGS. SET SCREW TYPE FITTINGS WILL NOT BE ACCEPTABLE. CONDUITS FOR UNDERGROUND APPLICATIONS SHALL BE AS DETAILED HEREIN. CONDUITS FOR GROUNDING ELECTRODE CONDUCTORS OR INDIVIDUAL GROUNDING CONDUCTORS SHALL BE SCHEDULE 40 OR SCHEDULE 80 PVC.

16. PROVIDE LIQUID TIGHT FLEXIBLE METAL CONDUIT AT CONNECTIONS TO EQUIPMENT SUBJECT TO VIBRATION OR WHERE FLEXIBILITY IS REQUIRED. LIQUID TIGHT FLEXIBLE METAL CONDUIT AND ASSOCIATED FITTINGS SHALL BE U.L. LISTED TO MEET THE REQUIREMENTS OF NEC 350.6, SUITABLE FOR GROUNDING, SUNLIGHT RESISTANT, AND RESISTANT TO OIL, GASOLINE, AND GREASE. LIQUID TIGHT FLEXIBLE METAL CONDUIT THAT IS USED FOR FLEXIBILITY (INCLUDING CONNECTIONS TO MOTORS, TRANSFORMERS, & CONSTANT CURRENT REGULATORS) SHALL REQUIRE AN EXTERNAL BONDING JUMPER OR INTERNAL EQUIPMENT GROUNDING CONDUCTOR PER NEC 350.60. DO NOT INSTALL LIQUID TIGHT FLEXIBLE METAL CONDUIT THAT IS NOT UL. LISTED. CONFIRM LIQUID–TIGHT FLEXIBLE METAL CONDUIT BEARS THE UL LABEL PRIOR TO INSTALLING IT.

17. UNLESS OTHERWISE SHOWN, ALL EXPOSED CONDUITS SHALL BE RUN PARALLEL TO OR AT RIGHT ANGLES WITH THE LINES OF THE STRUCTURE.

18. ALL STEEL CONDUITS, FITTINGS, NUTS, BOLTS, ETC. SHALL BE GALVANIZED.

19. USE CONDUIT BUSHINGS AT EACH CONDUIT TERMINATION. WHERE NO. 4 AWG OR LARGER UNDERGROUND WIRE IS INSTALLED, USE INSULATED BUSHINGS.

20. USE DOUBLE LOCK NUTS AT EACH CONDUIT TERMINATION.

21. WRAP ALL PRIMARY AND SECONDARY POWER CONNECTIONS WITH SUFFICIENT LAYERS OF HIGH VOLTAGE ELECTRICAL INSULATING TAPE (RUBBER SPLICING TAPE SUITABLE FOR PRIMARY ELECTRICAL INSULATION FOR SPLICING CABLE FROM 600 VOLTS TO 69,000 VOLTS) AND COVER WITH VINYL ELECTRICAL TAPE (ALL–WEATHER VINYL INSULATING TAPE SUITABLE FOR PROTECTIVE JACKETING FOR HIGH–VOLTAGE CABLE SPLICES AND REPAIRS) FOR FULL VALUE OF CABLE INSULATION VOLTAGE. PER ILLINOIS STANDARD SPECIFICATIONS FOR CONSTRUCTION OF AIRPORTS ITEM 108 AND FAA AC 150/5370–10G ITEM L–108, HIGH VOLTAGE ELECTRICAL INSULATING TAPE SHALL BE 3M SCOTCH 23, 3M SCOTCH 130C OR APPROVED EQUIVALENT, AND VINYL ELECTRICAL TAPE SHALL BE 3M SCOTCH 88 OR APPROVED EQUIVALENT. TAPES MUST BE RATED SUITABLE FOR THE APPLICATION.

22. UNLESS OTHERWISE NOTED, ALL SINGLE CONDUCTOR CONTROL WIRING SHALL BE NO. 12 AWG. COPPER MINIMUM.

23. THE FOLLOWING SHALL APPLY TO RELAY/CONTACTOR PANELS/ENCLOSURES:

   A. FOR INTERIOR LOCATIONS ALL COMPONENTS SHALL BE MOUNTED IN NEMA 12 (DUST TIGHT) ENCLOSURE(S) WITH VERTICALLY HINGED COVERS. FOR EXTERIOR/OUTDOOR LOCATIONS ALL COMPONENTS SHALL BE MOUNTED IN NEMA 4X STAINLESS STEEL ENCLOSURE(S) WITH VERTICALLY HINGED COVERS. ALL CONDUIT ENTRIES INTO NEMA 4, 4X ENCLOSURES SHALL HAVE NEMA 4 HUBS LISTED SUITABLE FOR THE RESPECTIVE ENCLOSURE TO MAINTAIN THE NEMA 4, 4X RATING OF THE ENCLOSURE.

   B. THE ENCLOSURE(S) SHALL HAVE AMPLE SPACE FOR THE CIRCUIT COMPONENTS, TERMINAL BLOCKS AND INCOMING AND INTERNAL WIRING.

   C. ALL CONTROL CONDUCTOR TERMINATIONS SHALL BE OF THE OPEN–EYE CONNECTOR/SCREW TYPE. SOLDERED CLOSED–EYE TERMINATIONS, OR TERMINATIONS WITHOUT CONNECTORS ARE NOT ACCEPTABLE.

   D. WHEN THE ENCLOSURE COVER IS OPENED, ALL CIRCUIT COMPONENTS, WIRING AND TERMINALS SHALL BE EXPOSED AND ACCESSIBLE WITHOUT REMOVAL OF ANY PANELS, COVERS, ETC., EXCEPT THOSE COVERING HIGH VOLTAGE COMPONENTS.

   E. ACCESS TO, OR REMOVAL OF A CIRCUIT COMPONENT OR TERMINAL BLOCK WILL NOT REQUIRE THE REMOVAL OF ANY OTHER CIRCUIT COMPONENT OR TERMINAL BLOCK.

   F. EACH CIRCUIT COMPONENT SHALL BE CLEARLY IDENTIFIED INDICATING ITS CORRESPONDING NUMBER SHOWN ON THE DRAWINGS AND ITS FUNCTION.

   G. A COMPLETE WIRING DIAGRAM SHALL BE MOUNTED ON THE INSIDE OF THE COVER. THE DIAGRAM SHALL REPRESENT EACH CONDUCTOR BY A SEPARATE LINE.

   H. THE DIAGRAM SHALL IDENTIFY EACH CIRCUIT COMPONENT AN NUMBERING AND COLOR OF EACH TERMINAL CONDUCTOR AND TERMINAL.

   I. ALL WIRING SHALL BE NEATLY TRAINED AND LACED.

   J. MINIMUM WIRE SIZE SHALL BE NO. 12 AWG.

24. FURNISH & INSTALL A WEATHERPROOF WARNING LABEL FOR EACH METER SOCKET, SERVICE DISCONNECT, SAFETY SWITCH, CUTOUT, PANELBOARD, & CONTROL PANEL TO WARN PERSONS OF POTENTIAL ELECTRIC ARC FLASH HAZARDS, PER THE REQUIREMENTS OF NEC 110.16 "ARC FLASH HAZARD WARNING".

HANSON
Engineering | Planning | Allied Services

Offices Nationwide
www.hanson-inc.com

Hanson Professional Services Inc.
1525 S. 6th Street
Springfield, IL 62703
phone: 217-788-2450
fax: 217-788-2503

Illinois Licensed
Professional Service Corporation
#184-001084

ST. LOUIS
DOWNTOWN AIRPORT
Bi-State Development Agency
6100 Archview Drive
Cahokia, IL 62206-1445

LICENSED PROFESSIONAL ENGINEER
KEVIN N. LIGHTFOOT
062-047643
STATE OF ILLINOIS

Kevin N. Lightfoot
6/6/2017
EXPIRES: 11/30/2017
COVERING
ELECTRICAL DESIGN

TAXIWAY B RELOCATION, PHASE 1:
FILLET IMPROVEMENTS

SBG No:
3-17-SBGP-133/134
IDA No: CPS-4505

Contract No. SD058

NO.	DATE	DESCRIPTION		
		DES	DWN	REV

ISSUE: JUNE 9, 2017
PROJECT NO: 16A0107
CAD FILE: E-001-NOTE.DWG
DESIGN BY: KNL 03/18/2017
DRAWN BY: RAD 03/22/2017
REVIEWED BY: BSS 03/23/17

SHEET TITLE

ELECTRICAL NOTES
SHEET 1

AIRFIELD LIGHTING NOTES

1. UNLESS OTHERWISE NOTED, ALL UNDERGROUND AIRFIELD LIGHTING SERIES CIRCUIT CONDUCTORS WHETHER DEB OR IN DUCT/CONDUIT SHALL BE FAA APPROVED 5000 VOLT L-824 TYPE. ALL UNDERGROUND FIELD POWER LOW VOLTAGE (600 VOLT & BELOW) CIRCUIT CONDUCTORS WHETHER DEB OR IN DUCT/CONDUIT SHALL BE UL LISTED 600 VOLT, TYPE XLP-USE-2 COPPER CONDUCTORS. CONDUCTOR SIZES SHALL BE AS SPECIFIED, HEREIN.

2. NO COMPONENTS OF PRIMARY CIRCUIT SUCH AS CABLE, CONNECTORS AND TRANSFORMERS SHALL BE BROUGHT ABOVE GROUND AT EDGE LIGHTS, SIGNS, REIL, PAPI, ETC.

3. THERE SHALL BE NO EXPOSED POWER/CONTROL CABLES BETWEEN THE POINT WHERE THEY LEAVE THE UNDERGROUND (DEB OR L-867 BASES) AND WHERE THEY ENTER THE EQUIPMENT (SUCH AS TAXIWAY SIGNS, PAPI, REIL, ETC.) ENCLOSURES. THESE CABLES SHALL BE ENCLOSED IN RIGID CONDUIT OR IN FLEXIBLE, WATERTIGHT CONDUIT WITH BREAKABLE COUPLING(S) AT THE GRADE OR THE HOUSING COVER, AS SHOWN IN APPLICABLE DETAILS.

4. THE JOINTS OF THE L-823 PRIMARY CONNECTORS SHALL BE WRAPPED WITH AT LEAST ONE LAYER OF RUBBER OR SYNTHETIC RUBBER TAPE AND ONE LAYER OF PLASTIC TAPE, ONE-HALF LAPPED, EXTENDING AT LEAST 1-1/2 INCHES ON EACH SIDE OF THE JOINT, AS SHOWN ON AIRFIELD LIGHTING CABLE SPLICE DETAILS.

5. THE CABLE ENTRANCE INTO THE FIELD-ATTACHED L-823 CONNECTORS SHALL BE ENCLOSED BY A HEAT-SHRINKABLE TUBING WITH CONTINUOUS INTERNAL ADHESIVE, AS SHOWN ON AIRFIELD LIGHTING CABLE SPLICE DETAILS.

6. L-823 TYPE II, TWO-CONDUCTOR SECONDARY CONNECTORS SHALL BE CLASS 'A' (FACTORY MOLDED).

7. THERE SHALL BE NO SPLICES IN THE SECONDARY CABLE(S) WITHIN THE STEMS OF A RUNWAY/TAXIWAY EDGE/THRESHOLD LIGHTING FIXTURE AND THE WIREWAYS LEADING TO TAXIWAY SIGNS AND PAPI/REIL EQUIPMENT.

8. ELECTRICAL INSULATING GREASE SHALL BE APPLIED WITHIN THE L-823, SECONDARY, TWO CONDUCTOR CONNECTORS TO PREVENT WATER ENTRANCE. THESE CONNECTORS SHALL NOT BE TAPED.

9. DEB ISOLATION TRANSFORMERS SHALL BE BURIED AT A DEPTH OF TEN (10") INCHES ON A LINE CROSSING THE LIGHT AND PERPENDICULAR TO THE RUNWAY/TAXIWAY CENTERLINE AT A LOCATION TWELVE (12") INCHES FROM THE LIGHT OPPOSITE FROM THE RUNWAY/TAXIWAY.

10. A SLACK OF THREE (3') FEET, MINIMUM, PLUS DEPTH OF BASE CAN (IF APPLICABLE), SHALL BE PROVIDED IN THE PRIMARY CABLE AT EACH TRANSFORMER/CONNECTOR TERMINATION. AT STAKE-MOUNTED LIGHTS, THE SLACK SHALL BE LOOSELY COILED IMMEDIATELY BELOW THE ISOLATION TRANSFORMER. THERE SHALL BE NO ADDITIONAL PAYMENT FOR CABLE SLACK AND THEREFORE THE QUANTITY OF PROPOSED CABLE SLACK HAS NOT BEEN INCLUDED IN THE RESPECTIVE CABLE PAY ITEMS.

11. DIRECTION OF PRIMARY CABLES SHALL BE IDENTIFIED BY COLOR CODING AS FOLLOWS: WHEN FACING LIGHT WITH BACK TO PAVEMENT, CABLE TO THE LEFT IS CODED RED AND CABLE TO RIGHT IS CODED BLUE. THIS APPLIES TO STAKE MOUNTED LIGHTS AND BASE MOUNTED LIGHTS WHERE THE BASE HAS ONLY ONE ENTRANCE.

12. L-867 BASES SHALL BE SIZE B, 24" DEEP, CLASS IA OR CLASS IB, UNLESS OTHERWISE NOTED.

13. BASE MOUNTED BREAKABLE COUPLINGS SHALL NOT HAVE WEEP HOLES TO THE OUTSIDE. PLUGGED UP HOLES SHALL NOT BE ACCEPTABLE. IT SHALL BE A 1/4" DIAMETER, MINIMUM, OR EQUIVALENT OPENING FOR DRAINAGE FROM THE SPACE AROUND THE SECONDARY CONNECTOR INTO THE L-867 BASE.

14. THE ELEVATION OF THE BREAKABLE COUPLING GROOVE SHALL NOT EXCEED 1-1/2" ABOVE THE EDGE OF THE COVER IN CASE OF BASE MOUNTED COUPLINGS, OR THE TOP OF THE STAKE IN CASE OF STAKE MOUNTED COUPLINGS.

15. WHERE THE BREAKABLE COUPLING IS NOT AN INTEGRAL PART OF THE LIGHT FIXTURE STEM OR MOUNTING LEG, A BEAD OF SILICON SEAL SHALL BE APPLIED COMPLETELY AROUND LIGHT STEM OR WIREWAY AT BREAKABLE COUPLING TO PROVIDE A WATERTIGHT SEAL.

16. TOPS OF THE STAKES SUPPORTING LIGHT FIXTURES SHALL BE FLUSH WITH THE SURROUNDING GRADE.

17. PLASTIC LIGHTING FIXTURE COMPONENTS, SUCH AS LAMP HEADS, STEMS, BREAKABLE COUPLINGS, BASE COVERS, BRACKETS, STAKES, SHALL NOT BE ACCEPTABLE.

18. THE TOLERANCE FOR THE HEIGHT OF RUNWAY/TAXIWAY EDGE LIGHTS SHALL BE: ONE (1) INCH. IN CASE OF STAKE MOUNTED LIGHTS, THE SPECIFIED LIGHTING FIXTURE HEIGHT SHALL BE MEASURED BETWEEN THE TOP OF THE STAKE AND THE TOP OF THE LENS. IN CASE OF BASE MOUNTED LIGHTS, THE SPECIFIED LIGHTING FIXTURE HEIGHT SHALL BE MEASURED BETWEEN THE TOP OF THE BASE FLANGE AND THE TOP OF THE LENS, THUS INCLUDING THE BASE COVER, THE FRANGIBLE COUPLING, THE STEM, THE LAMP HOUSING AND THE LENS.

19. THE TOLERANCE FOR THE LATERAL SPACING (LIGHT LANE TO RUNWAY/TAXIWAY CENTERLINE) OF RUNWAY/TAXIWAY EDGE LIGHTS SHALL BE ONE (1) INCH. THIS ALSO APPLIES AT INTERSECTIONS TO LATERAL SPACING BETWEEN LIGHTS OF A RUNWAY/TAXIWAY AND THE INTERSECTING RUNWAY/TAXIWAY.

20. ENTRANCES INTO L-867 BASES SHALL HAVE CONDUIT COUPLINGS OR REDUCERS TO INTERFACE UNIT DUCT/CONDUIT TO L-867 BASE HUBS, OR SHALL BE SEALED WITH HEAT SHRINK.

21. GALVANIZED/PAINTED EQUIPMENT/COMPONENT SURFACES SHALL NOT BE DAMAGED BY DRILLING, FILING, ETC. DRAIN HOLES IN METAL TRANSFORMER HOUSINGS SHALL BE MADE BEFORE GALVANIZING.

22. EDGE LIGHT NUMBERING TAGS SHALL BE FACING THE PAVEMENT.

23. CABLE/SPLICE/DUCT MARKERS SHALL BE PRECAST CONCRETE OF THE SIZE SHOWN. LETTERS/NUMBERS/ARROWS FOR THE LEGEND TO BE IMPRESSED INTO THE TOPS OF THE MARKERS SHALL BE PRE-ASSEMBLED AND SECURED IN THE MOLD BEFORE THE CONCRETE IS POURED. LEGEND INSCRIBED BY HAND IN WET CONCRETE SHALL NOT BE ACCEPTABLE.

24. ALL UNDERGROUND CABLE RUNS SHALL BE IDENTIFIED BY CABLE MARKERS AT 200 FEET MAXIMUM SPACING, WITH AN ADDITIONAL MARKER AT EACH CHANGE OF DIRECTION OF THE CABLE RUN. CABLE MARKERS SHALL BE INSTALLED IMMEDIATELY ABOVE THE CABLES.

25. THERE SHALL BE NO SPLICES BETWEEN THE ISOLATION TRANSFORMERS. L-823 CONNECTORS ARE ALLOWED AT TRANSFORMER CONNECTIONS ONLY, UNLESS OTHERWISE SHOWN.

26. APPLY AN OXIDE INHIBITING, ANTI-SEIZING COMPOUND TO ALL SCREWS, NUTS AND BREAKAGE COUPLING THREADS.

27. LOCATIONS OF ENDS OF ALL UNDERGROUND DUCTS SHALL BE IDENTIFIED BY DUCT MARKERS.

28. WHERE A PARALLEL, CONSTANT VOLTAGE PAPI SYSTEM IS PROVIDED, THE "T" SPLICES SHALL BE OF THE CAST TYPE.

29. CONCRETE USED FOR SLABS, FOOTINGS, BACKFILL AROUND TRANSFORMER HOUSINGS, MARKINGS, ETC. SHALL BE 3500 PSI, AIR-ENTRAINED.

30. ALL POWER AND CONTROL CABLES IN MAN/HAND HOLES SHALL BE TAGGED. USE EMBOSSED COPPER STRIPS TO BE ATTACHED AT BOTH ENDS TO THE CABLE BY THE USE OF PLASTIC STRAPS. MINIMUM OF TWO TAGS SHALL BE PROVIDED ON EACH CABLE IN A MAN/HAND HOLE-ONE AT THE CABLE ENTRANCE AND ONE AT THE CABLE EXIT.

31. THE LOCATION, SIZE AND TYPE OF MATERIAL OF EXISTING UNDERGROUND AND/OR ABOVEGROUND UTILITIES INDICATED ON THE PLANS IS NOT REPRESENTED AS BEING ACCURATE, SUFFICIENT OR COMPLETE. NEITHER THE OWNER NOR THE ENGINEER ASSUMES ANY RESPONSIBILITY WHATEVER IN RESPECT TO ACCURACY, COMPLETENESS, OR SUFFICIENCY OF THE INFORMATION. THERE IS NO GUARANTEE EITHER EXPRESSED OR IMPLIED, THAT THE LOCATIONS, SIZE AND TYPE OF MATERIAL OF EXISTING UNDERGROUND UTILITIES INDICATED ARE REPRESENTATIVE OF THOSE TO BE ENCOUNTERED IN THE CONSTRUCTION. IT SHALL BE THE CONTRACTOR'S RESPONSIBILITY TO DETERMINE THE ACTUAL LOCATION OF ALL SUCH FACILITIES, INCLUDING SERVICE CONNECTIONS TO UNDERGROUND UTILITIES. PRIOR TO CONSTRUCTION, THE CONTRACTOR SHALL NOTIFY THE UTILITY COMPANIES OF HIS OPERATIONAL PLANS AND SHALL OBTAIN FROM THE RESPECTIVE UTILITY COMPANIES DETAILED INFORMATION AND ASSISTANCE RELATIVE TO THE LOCATION OF THEIR FACILITIES AND THE WORKING SCHEDULE OF THE COMPANIES FOR REMOVAL OR ADJUSTMENT WHERE REQUIRED. IN THE EVENT AN UNEXPECTED UTILITY INTERFERENCE IS ENCOUNTERED DURING CONSTRUCTION, THE CONTRACTOR SHALL IMMEDIATELY NOTIFY THE UTILITY COMPANY OF JURISDICTION. THE OWNER'S REPRESENTATIVE AND/OR THE RESIDENT ENGINEER SHALL ALSO BE IMMEDIATELY NOTIFIED. ANY DAMAGE TO SUCH MAINS AND SERVICES SHALL BE RESTORED TO SERVICE AT ONCE AND PAID FOR BY THE CONTRACTOR AT NO ADDITIONAL COST TO THE CONTRACT. ALL UTILITY CABLES AND LINES SHALL BE LOCATED BY THE RESPECTIVE UTILITY. CONTACT JULIE (JOINT UTILITY LOCATION INFORMATION FOR EXCAVATORS) FOR UTILITY INFORMATION, PHONE: 1-800-892-0123. CONTACT THE FAA (FEDERAL AVIATION ADMINISTRATION) FOR ASSISTANCE IN LOCATING FAA CABLES AND UTILITIES. LOCATION OF FAA POWER, CONTROL AND COMMUNICATION CABLES SHALL BE COORDINATED WITH AND/OR LOCATED BY THE FAA. ALSO CONTACT AIRPORT DIRECTOR/MANAGER AND AIRPORT PERSONNEL FOR ASSISTANCE IN LOCATING UNDERGROUND AIRPORT CABLES AND/OR UTILITIES. ALSO COORDINATE WORK WITH ALL ABOVE GROUND UTILITIES.

32. WHEN PREPARING CABLE FOR SPLICES, THE CONTRACTOR SHALL USE A CABLE STRIPPER/PENCILLER WHENEVER CABLE CONNECTIONS ARE MADE.

GROUNDING NOTES FOR AIRFIELD LIGHTING

1. GROUNDING FOR RUNWAY LIGHTS, TAXIWAY LIGHTS, AND LIGHTED TAXI GUIDANCE SIGNS SHALL BE AS DETAILED ON THE PLANS AND AS SPECIFIED HEREIN. PER FAA AC 150/5340-30H DESIGN AND INSTALLATION DETAILS FOR AIRPORT VISUAL AIDS, CHAPTER 12, PART 12.6; A GROUND MUST BE INSTALLED AT EACH LIGHT FIXTURE. THE PURPOSE OF THE LIGHT BASE GROUND IS TO PROVIDE A DEGREE OF PROTECTION FOR MAINTENANCE PERSONNEL FROM POSSIBLE CONTACT WITH AN ENERGIZED LIGHT BASE OR MOUNTING STAKE THAT MAY RESULT FROM A SHORTED POWER CABLE OR ISOLATION TRANSFORMER. A LIGHT BASE GROUND SHALL BE INSTALLED AT EACH TRANSFORMER BASE/LIGHT CAN ASSOCIATED WITH RUNWAY LIGHTS, TAXIWAY LIGHTS, AND LIGHTED TAXI GUIDANCE SIGNS. A LIGHT BASE GROUND SHALL ALSO BE INSTALLED AT EACH STAKE MOUNTED LIGHT FIXTURE. A LIGHT BASE GROUND SHALL BE INSTALLED AND CONNECTED TO THE METAL FRAME OF EACH TAXI GUIDANCE SIGN AS DETAILED ON THE PLANS AND IN ACCORDANCE WITH THE RESPECTIVE TAXI GUIDANCE SIGN MANUFACTURER RECOMMENDATIONS. THE LIGHT BASE GROUND SHALL BE A #6 AWG BARE COPPER CONDUCTOR CONNECTED TO THE GROUND LUG ON THE RESPECTIVE L-867 TRANSFORMER BASE/LIGHT CAN OR MOUNTING STAKE AND A 3/4-INCH DIAMETER BY 10-FEET LONG (MINIMUM) UL LISTED COPPER CLAD GROUND ROD. CONNECTIONS TO GROUND LUGS ON THE L-867 TRANSFORMER BASE/LIGHT CAN OR MOUNTING STAKE SHALL BE WITH A UL LISTED GROUNDING CONNECTOR SUITABLE FOR DIRECT BURY IN EARTH OR CONCRETE. CONNECTIONS TO GROUND RODS SHALL BE MADE WITH EXOTHERMIC WELD TYPE CONNECTORS, CADWELD BY PENTAIR ERICO PRODUCTS, INC., THERMOWELD BY CONTINENTAL INDUSTRIES, INC., ULTRAWELD BY HARGER, OR APPROVED EQUAL. EXOTHERMIC WELD CONNECTIONS SHALL BE INSTALLED IN CONFORMANCE WITH THE RESPECTIVE MANUFACTURER'S DIRECTIONS USING MOLDS AS REQUIRED FOR EACH RESPECTIVE APPLICATION. BOLTED CONNECTIONS WILL NOT BE PERMITTED AT GROUND RODS. TOP OF GROUND RODS SHALL BE BURIED 12 INCHES MINIMUM BELOW GRADE, UNLESS SPECIFIED OTHERWISE HEREIN, FOR RESPECTIVE APPLICATIONS.

2. FOR BASE MOUNTED LIGHT FIXTURES THE LIGHT FIXTURE MUST BE BONDED TO THE LIGHT BASE INTERNAL GROUND LUG VIA A #6 AWG STRANDED COPPER WIRE RATED FOR 600 VOLTS WITH GREEN XHHW INSULATION OR A BRAIDED GROUND STRAP OF EQUIVALENT CURRENT RATING. THE GROUND WIRE LENGTH MUST BE SUFFICIENT TO ALLOW THE REMOVAL OF THE LIGHT FIXTURE FROM THE LIGHT BASE FOR ROUTING MAINTENANCE. SEE THE LIGHT FIXTURE MANUFACTURER'S INSTRUCTIONS FOR PROPER METHODS OF ATTACHING BONDING WIRE.

3. CLEAN ALL METAL SURFACES BEFORE MAKING GROUND CONNECTIONS. METALLIC SURFACES TO BE JOINED SHALL BE PREPARED BY THE REMOVAL OF ALL NON-CONDUCTIVE MATERIAL PER 2014 NATIONAL ELECTRICAL CODE ARTICLE 250-12.

4. PER FAA 150/5340-30H THE RESISTANCE TO GROUND OF THE RESPECTIVE MOUNTING STAKE OR LIGHT BASE (WITH GROUND ROD CONNECTED) MUST BE 25 OHMS OR LESS.

5. FOR TAXIWAY LIGHTS THAT ARE SPACED WITH LESS THAN 10 FEET OF SEPARATION BETWEEN THEM, PROVIDE ONE 3/4-INCH DIAMETER BY 10 FEET LONG GROUND ROD PER TWO ADJACENT TAXIWAY LIGHTS. LOCATE GROUND ROD MIDWAY BETWEEN THE TWO TAXIWAY LIGHTS.

6. STEEL USED TO MANUFACTURE GROUND RODS SHALL BE 100% DOMESTIC STEEL TO COMPLY WITH THE AIRPORT IMPROVEMENT PROGRAM BUY AMERICAN PREFERENCE REQUIREMENTS AND THE STEEL PRODUCTS PROCUREMENT ACT.

7. FOR EACH AIRFIELD LIGHT FIXTURE, TAXI GUIDANCE SIGN, AND NAVAID THE CONTRACTOR SHALL TEST THE MADE ELECTRODE GROUND SYSTEM WITH AN INSTRUMENT SPECIFICALLY DESIGNED FOR TESTING GROUND SYSTEMS. TEST RESULTS SHALL BE RECORDED FOR EACH AIRFIELD LIGHT FIXTURE, TAXI GUIDANCE SIGN, AND NAVAIDS INSTALLATION. IF GROUND RESISTANCE EXCEEDS 25 OHMS, CONTACT THE PROJECT ENGINEER FOR FURTHER DIRECTION. COPIES OF THE GROUND SYSTEM TEST RESULTS SHALL BE FURNISHED TO THE RESIDENT ENGINEER/TECHNICIAN AND THE PROJECT ENGINEER.

HANSON
Engineering | Planning | Allied Services

Offices Nationwide
www.hanson-inc.com

Hanson Professional Services Inc.
1525 S. 6th Street
Springfield, IL 62703
phone: 217-788-2450
fax: 217-788-2503

Illinois Licensed
Professional Service Corporation
#184-001084

ST. LOUIS
DOWNTOWN AIRPORT
Bi-State Development Agency
6100 Archview Drive
Cahokia, IL 62206-1445

LICENSED PROFESSIONAL ENGINEER
KEVIN N. LIGHTFOOT
062-047643
STATE OF ILLINOIS

Kevin N. Lightfoot
6/6/2017
EXPIRES: 11/30/2017
COVERING
ELECTRICAL DESIGN

TAXIWAY B RELOCATION, PHASE 1:
FILLET IMPROVEMENTS

SBG No:
3-17-SBGP-133/134
IDA No: CPS-4505

Contract No. SD058

NO.	DATE	DESCRIPTION		
		DES	DWN	REV

ISSUE: JUNE 9, 2017
PROJECT NO: 16A0107
CAD FILE: E-002-NOTE.DWG
DESIGN BY: KNL 03/18/2017
DRAWN BY: RAD 03/22/2017
REVIEWED BY: BSS 03/23/17

SHEET TITLE

ELECTRICAL NOTES
SHEET 2

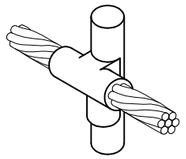

CABLE TO GROUND ROD

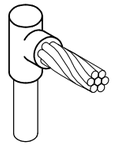

CABLE TO GROUND ROD

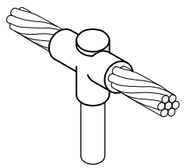

CABLE TO GROUND ROD

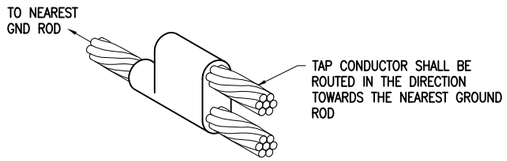

CABLE TO CABLE HORIZONTAL PARALLEL TAP

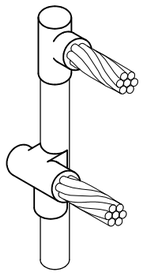

CABLES TO GROUND ROD

DETAIL NOTES

1. ALL BELOW GRADE CONNECTIONS TO GROUND RODS & GROUND RING CONDUCTORS SHALL BE EXOTHERMIC WELD TYPE CONNECTIONS. EXOTHERMIC WELDS SHALL BE CADWELD AS MANUFACTURED BY PENTAIR ERICO PRODUCTS, ULTRAWELD AS MANUFACTURED BY HARGER LIGHTNING PROTECTION & GROUNDING EQUIPMENT, THERMOWELD AS MANUFACTURED BY CONTINENTAL INDUSTRIES, OR APPROVED EQUAL. VERIFY PROPER SIZES, MOLDS, TYPES, AND REQUIREMENTS FOR THE RESPECTIVE APPLICATION WITH THE MANUFACTURER, AND INSTALL PER THEIR DIRECTIONS.

2. FOR APPLICATIONS TO GALVANIZED STEEL OR PAINTED STEEL, REMOVE GALVANIZING AND/OR PAINT & CLEAN THE SURFACE TO EXPOSE BARE STEEL BEFORE MAKING EXOTHERMIC WELD CONNECTION.

3. INDIVIDUAL GROUNDING ELECTRODE CONDUCTORS SHALL NOT BE INSTALLED IN METAL CONDUIT. INSTALL GROUNDING ELECTRODE CONDUCTORS IN SCHED 40 PVC CONDUIT AS REQUIRED IN FOUNDATIONS, FOR PROTECTION, WHERE ENTERING ENCLOSURES, ETC. WHERE PLASTIC CONDUIT IS USED FOR INDIVIDUAL GROUND WIRES, DO NOT COMPLETELY ENCIRCLE THE CONDUIT WITH FERROUS AND/OR MAGNETIC MATERIALS. WHERE METAL CLAMPS ARE INSTALLED USE NYLON BOLTS, NUTS, WASHERS, & SPACERS TO INTERRUPT A COMPLETE METALLIC PATH FROM ENCIRCLING THE CONDUIT.

EXOTHERMIC WELD DETAILS

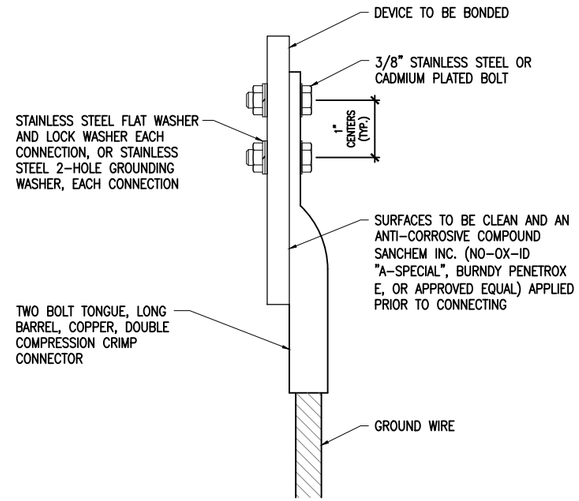

2 HOLE LONG BARREL COMPRESSION LUG TABLE (OR APPROVED EQUAL)			
WIRE SIZE	BURNDY CAT. NO.	THOMAS & BETTS CAT. NO.	PENN-UNION CAT. NO.
#8 AWG STRANDED	YA8C-2TC38	256-30695-1157	BBLU-8D-2TC38
#6 AWG SOLID	YA8C-2TC38 OR YGA6C-2TC38E2G1	(VERIFY WITH MFR)	(VERIFY WITH MFR)
#6 AWG STRANDED	YA6C-2TC38	256-30695-1158	BBLU-6D-2TC38
#4 AWG STRANDED	YA4C-2TC38	256-30695-1159	BBLU-4D-2TC38
#2 AWG STRANDED	YA2C-2TC38	256-30695-1160	BBLU-2D-2TC38
#2 AWG SOLID	YA3C-2TC38	256-30695-1160	BBLU-3D-2TC38
#1/0 AWG STRANDED	YA25-2TC38	256-30695-1162	BBLU-1/0D-2TC38
#2/0 AWG STRANDED	YA26-2TC38	256-30695-1116	BBLU-2/0D-2TC38
#3/0 AWG STRANDED	YA27-2TC38	54816BE	BBLU-3/0D-2TC38
#4/0 AWG STRANDED	YA28-2TC38	256-30695-1117	BBLU-4/0D-2TC38

NOTES

1. ALL CONNECTIONS TO GROUND BUS BAR SHALL BE WITH 2 HOLE TONGUE LONG BARREL COMPRESSION LUGS BOLTED TO THE BUS BAR.

2. GROUND WIRE CONNECTIONS TO EQUIPMENT SHALL BE WITH 2 HOLE TONGUE LONG BARREL COMPRESSION LUGS BOLTED TO THE DEVICE OR WITH THE RESPECTIVE EQUIPT MANUFACTURER'S LUG OR TERMINAL WHERE APPLICABLE.

3. GROUNDING ELECTRODE CONDUCTORS, BONDING JUMPERS, & INDIVIDUAL GROUND WIRES SHALL NOT BE INSTALLED IN METAL CONDUIT. WHERE PLASTIC CONDUIT IS USED FOR INDIVIDUAL GROUND WIRES, DO NOT COMPLETELY ENCIRCLE THE CONDUIT WITH FERROUS AND/OR MAGNETIC MATERIALS. WHERE METAL CLAMPS ARE INSTALLED USE NYLON BOLTS, NUTS, WASHERS, & SPACERS TO INTERRUPT A COMPLETE METALLIC APTH FROM ENCIRCLING THE CONDUIT.

4. ALL CONNECTIONS SHALL BE COATED WITH A CORROSION PREVENTATIVE COMPOUND (SANCHEM INC. NO-OX-ID "A-SPECIAL", BURNDY PENETROX E, OR APPROVED EQUAL) BEFORE JOINING. ALL COPPER BUS BARS SHALL BE CLEANED PRIOR TO MAKING CONNECTIONS TO REMOVE SURFACE OXIDATION. CLEAN SURFACES, OF RESPECTIVE DEVICES TO BE BONDED, TO BARE METAL, PER NEC 250-12.

GROUNDING LUG CONNECTION DETAIL

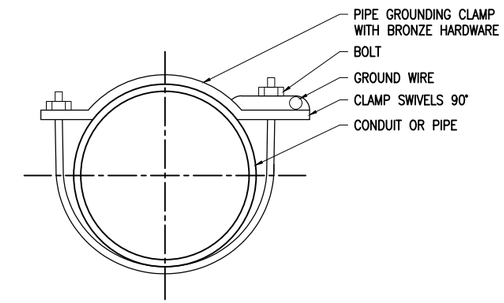

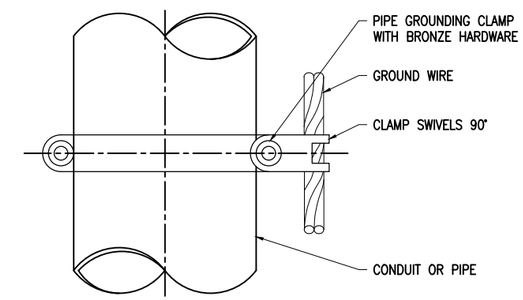

PIPE GROUNDING CLAMP TABLE (OR APPROVED EQUAL)		
BURNDY CAT. NO.	THOMAS & BETTS CAT. NO.	PIPE SIZE
GAR3902-BU	3902BU	1/2" - 1"
GAR3903-BU	3903BU	1 1/4" - 2"
GAR3904-BU	3904BU	2 1/2" - 3 1/2"
GAR3905-BU	3905BU	4" - 5"
GAR3906-BU	3906BU	6"

NOTES

1. PIPE GROUNDING CLAMPS SHALL HAVE BRONZE HARDWARE, BE CORROSION RESISTANT, SUITABLE FOR DIRECT BURIAL IN EARTH OR CONCRETE, & UL467 LISTED.

PIPE/CONDUIT GROUNDING CLAMP DETAIL

HANSON
Engineering | Planning | Allied Services

Offices Nationwide
www.hanson-inc.com

Hanson Professional Services Inc.
1525 S. 6th Street
Springfield, IL 62703
phone: 217-788-2450
fax: 217-788-2503

Illinois Licensed
Professional Service Corporation
#184-001084

ST. LOUIS
DOWNTOWN AIRPORT
Bi-State Development Agency
6100 Archview Drive
Cahokia, IL 62206-1445

LICENSED PROFESSIONAL ENGINEER
KEVIN N. LIGHTFOOT
062-047643
STATE OF ILLINOIS

Kevin N. Lightfoot
6/6/2017
EXPIRES: 11/30/2017
COVERING
ELECTRICAL DESIGN

TAXIWAY B RELOCATION,
PHASE 1:
FILLET IMPROVEMENTS

SBG No:
3-17-SBGP-133/134
IDA No: CPS-4505

Contract No. SD058

NO.	DATE	DESCRIPTION		
		DES	DWN	REV

ISSUE: JUNE 9, 2017
PROJECT NO: 16A0107
CAD FILE: E-506-DETL.DWG
DESIGN BY: KNL 03/07/2017
DRAWN BY: CWS 03/08/2017
REVIEWED BY: BSS 03/23/17

SHEET TITLE

GROUNDING DETAILS

JUN 09, 2017 1:47 PM HERND01562
I:\16JOBS\16A0107\16A0107D\CAD\AIRPORT\SHEET\E-506-DETL.DWG

GROUNDING NOTES

1. THE CONTRACTOR SHALL FURNISH AND INSTALL ALL GROUNDING AS MAY BE NECESSARY OR REQUIRED TO MAKE A COMPLETE GROUNDING SYSTEM AS REQUIRED BY THE LATEST NATIONAL ELECTRICAL CODE (NFPA 70) IN FORCE AND FAA–STD–019e (LIGHTNING AND SURGE PROTECTION, GROUNDING, BONDING, AND SHIELDING REQUIREMENTS FOR FACILITIES AND ELECTRONIC EQUIPMENT). THE RELIABILITY OF THE GROUNDING SYSTEM IS DEPENDENT ON CAREFUL, PROPER INSTALLATION AND CHOICE OF MATERIALS. IMPROPER PREPARATION OF SURFACES TO BE JOINED TO MAKE AN ELECTRICAL PATH, LOOSE JOINTS OR CORROSION CAN INTRODUCE IMPEDANCE THAT WILL SERIOUSLY IMPAIR THE ABILITY OF THE GROUND PATH TO PROTECT PERSONNEL AND EQUIPMENT AND TO ABSORB TRANSIENTS THAT CAN CAUSE NOISE IN COMMUNICATIONS CIRCUITS. THE FOLLOWING FUNCTIONS ARE PARTICULARLY IMPORTANT TO ENSURE A RELIABLE GROUND SYSTEM:

2. FURNISH AND INSTALL GROUND RODS AS DETAILED HEREIN. GROUND RODS FOR AIRFIELD LIGHTING, TAXI SIGNS AND SPLICE CANS SHALL BE MINIMUM 3/4–IN. DIAMETER BY 10–FT LONG, UL–LISTED COPPER CLAD WITH 10–MIL MINIMUM COPPER COATING. GROUND RODS FOR OTHER APPLICATIONS SHALL BE MINIMUM 3/4–IN. DIAMETER BY 10–FT LONG, UL–LISTED, COPPER CLAD WITH 10–MIL MINIMUM COPPER COATING. GROUND RODS SHALL BE SPACED OR AS DETAILED ON THE RESPECTIVE PLANS, AND IN NO CASE SPACED LESS THAN ONE ROD LENGTH APART. ALL CONNECTIONS TO GROUND RODS AND THE GROUND RING SHALL BE MADE WITH EXOTHERMIC WELD TYPE CONNECTORS, CADWELD BY PENTAIR ERICO PRODUCTS, THERMOWELD BY CONTINENTAL INDUSTRIES, OR ULTRAWELD BY HARGER, OR APPROVED EQUAL. EXOTHERMIC WELD CONNECTIONS SHALL BE INSTALLED IN CONFORMANCE WITH THE RESPECTIVE MANUFACTURER'S DIRECTIONS USING MOLDS AS REQUIRED FOR EACH RESPECTIVE APPLICATION. BOLTED CONNECTIONS WILL NOT BE PERMITTED AT GROUND RODS OR AT BURIED GROUNDING ELECTRODE CONDUCTORS.

3. CONTRACTOR SHALL TEST EACH MADE ELECTRODE GROUND ROD/GROUND FIELD/GROUND RING WITH AN INSTRUMENT SPECIFICALLY DESIGNED FOR TESTING GROUND FIELD SYSTEMS. IF GROUND RESISTANCE EXCEEDS 25 OHMS, CONTACT THE PROJECT ENGINEER FOR FURTHER DIRECTION. COPIES OF GROUND ROD TEST RESULTS SHALL BE FURNISHED TO THE RESIDENT ENGINEER/RESIDENT TECHNICIAN AND PROJECT ENGINEER.

4. ALL PRODUCTS ASSOCIATED WITH THE GROUNDING SYSTEM SHALL BE UL–LISTED AND LABELED.

5. ALL BOLTED OR MECHANICAL CONNECTIONS SHALL BE COATED WITH A CORROSION PREVENTATIVE COMPOUND BEFORE JOINING, SANCHEM INC. "NO–OX–ID "A–SPECIAL" COMPOUND, BURNDY PENETROX E, OR APPROVED EQUAL.

6. METALLIC SURFACES TO BE JOINED SHALL BE PREPARED BY THE REMOVAL OF ALL NON–CONDUCTIVE MATERIAL, PER 2014 NATIONAL ELECTRICAL CODE ARTICLE 250–12. ALL COPPER BUS BARS MUST BE CLEANED PRIOR TO MAKING CONNECTIONS TO REMOVE SURFACE OXIDATION.

7. METALLIC RACEWAY FITTINGS SHALL BE MADE UP TIGHT TO PROVIDE A PERMANENT LOW IMPEDANCE PATH FOR ALL CIRCUITS. METAL CONDUIT TERMINATIONS IN ENCLOSURES SHALL BE BONDED TO THE ENCLOSURE WITH UL–LISTED FITTINGS SUITABLE FOR GROUNDING. PROVIDE GROUNDING BUSHINGS WITH BONDING JUMPERS FOR ALL METAL CONDUITS ENTERING SERVICE EQUIPMENT (METER BASE, CT CABINET, MAIN SERVICE BREAKER ENCLOSURE, ETC.). PROVIDE GROUNDING BUSHINGS WITH BONDING JUMPERS FOR ALL METAL CONDUITS ENTERING AN ENCLOSURE THROUGH CONCENTRIC OR ECCENTRIC KNOCKOUTS THAT ARE PUNCHED OR OTHERWISE FORMED SO AS TO IMPAIR THE ELECTRICAL CONNECTION TO GROUND. STANDARD LOCKNUTS OR BUSHINGS SHALL NOT BE THE SOLE MEANS FOR BONDING WHERE A CONDUIT ENTERS AN ENCLOSURE THROUGH A CONCENTRIC OR ECCENTRIC KNOCKOUT

8. ALL CONNECTIONS, LOCATED ABOVE GRADE, BETWEEN THE DIFFERENT TYPES OF GROUNDING CONDUCTORS SHALL BE MADE USING UL–LISTED DOUBLE COMPRESSION CRIMP TYPE CONNECTORS OR UL–LISTED BOLTED GROUND CONNECTORS. FOR GROUND CONNECTIONS TO ENCLOSURES, CASES AND FRAMES OF ELECTRICAL EQUIPMENT NOT SUPPLIED WITH GROUND LUGS THE CONTRACTOR SHALL DRILL REQUIRED HOLES FOR MOUNTING A BOLTED GROUND CONNECTOR. ALL BOLTED GROUND CONNECTORS SHALL BE BURNDY, THOMAS AND BETTS, OR EQUAL. TIGHTEN CONNECTIONS TO COMPLY WITH TIGHTENING TORQUES IN UL STANDARD 486A TO ASSURE PERMANENT AND EFFECTIVE GROUNDING.

9. ALL METAL EQUIPMENT ENCLOSURES, CONDUITS, CABINETS, BOXES, RECEPTACLES, MOTORS, ETC. SHALL BE BONDED TO THE RESPECTIVE GROUNDING SYSTEM.

10. PROVIDE ALL BOXES FOR PROPOSED OUTLETS, SWITCHES, CIRCUIT BREAKERS, ETC. WITH GROUNDING SCREWS. PROVIDE ALL PANELBOARD, SWITCHGEAR, ETC., ENCLOSURES WITH GROUNDING BARS WITH INDIVIDUAL SCREWS, LUGS, CLAMPS, ETC., FOR EACH OF THE GROUNDING CONDUCTORS THAT ENTER THEIR RESPECTIVE ENCLOSURES.

11. EACH NEW FEEDER CIRCUIT AND/OR BRANCH CIRCUIT SHALL INCLUDE AN EQUIPMENT GROUND WIRE. METAL RACEWAY OR CONDUIT SHALL NOT MEET THIS REQUIREMENT. THE EQUIPMENT GROUND WIRE FROM EQUIPMENT SHALL NOT BE SMALLER THAN ALLOWED BY 2014 NEC TABLE 250–122 "MINIMUM SIZE CONDUCTORS OR GROUNDING RACEWAY AND EQUIPMENT." WHEN CONDUCTORS ARE ADJUSTED IN SIZE TO COMPENSATE FOR VOLTAGE DROP, EQUIPMENT–GROUNDING CONDUCTORS SHALL BE ADJUSTED PROPORTIONATELY ACCORDING TO CIRCULAR MIL AREA. ALL EQUIPMENT GROUND WIRES SHALL BE COPPER, EITHER BARE OR INSULATED GREEN IN COLOR. WHERE THE EQUIPMENT GROUNDING CONDUCTORS ARE INSULATED, THEY SHALL BE IDENTIFIED BY THE COLOR GREEN, AND SHALL BE THE SAME INSULATION TYPE AS THE PHASE CONDUCTORS.

12. ALL EXTERIOR METAL CONDUIT, WHERE NOT ELECTRICALLY CONTINUOUS BECAUSE OF MANHOLES, HANDHOLES, NON–METALLIC JUNCTION BOXES, ETC., SHALL BE BONDED TO ALL OTHER METAL CONDUIT IN THE RESPECTIVE DUCT RUN, AND AT EACH END, WITH A COPPER–BONDING JUMPER SIZED IN CONFORMANCE WITH 2014 NEC 250–102. WHERE METAL CONDUITS TERMINATE IN AN ENCLOSURE (SUCH AS A MOTOR CONTROL CENTER, SWITCHBOARD, ETC) WHERE THERE IS NOT ELECTRICAL CONTINUITY WITH THE CONDUIT AND THE RESPECTIVE ENCLOSURE, PROVIDE A BONDING JUMPER FROM THE RESPECTIVE ENCLOSURE GROUND BUS TO THE CONDUIT SIZED PER 2014 NEC 250–102.

13. IT IS THE INTENT OF THIS SPECIFICATION THAT ALL MOTOR FRAMES, PUMP BASES ELECTRICAL EQUIPMENT ENCLOSURES, PANEL HOUSINGS, CONDUITS, BOXES, ETC. HAVE A CONTINUOUS COPPER WIRE GROUND CONNECTION AND SHALL BE POSITIVELY BONDED TO THE RESPECTIVE GROUNDING SYSTEM. CONDUIT CONNECTORS WILL NOT BE CONSIDERED AS ADEQUATE GROUNDING.

14. PROVIDE A POSITIVE GROUND BOND FOR ALL OUTLET BOXES, ELECTRICAL EQUIPMENT ENCLOSURES, GROUNDING RECEPTACLES, TOGGLE SWITCHES, ETC. INSTALL A GROUNDING CONDUCTOR IN ALL WIRE AND CABLE RACEWAYS. GROUND CONDUCTOR TO HAVE 600–VOLT INSULATION AND BE IDENTIFIED BY A CONTINUOUS GREEN COLOR COATING. THEY SHALL BE USED SOLELY FOR GROUNDING PURPOSES AND BE ENTIRELY SEPARATE FROM WHITE GROUNDED NEUTRAL CONDUCTOR, EXCEPT AT SUPPLY SIDE OF SERVICE DISCONNECTING MEANS, WHERE GROUNDING AND NEUTRAL SYSTEMS ARE TO BE CONNECTED TO SERVICE GROUND.

15. EACH AND ALL GROUNDED CASED AND METAL PARTS ASSOCIATED WITH ELECTRICAL EQUIPMENT SHALL BE TESTED FOR CONTINUITY OF CONNECTION WITH GROUND BUS SYSTEM BY CONTRACTOR IN PRESENCE OF OWNER'S REPRESENTATIVE.

16. ALL CONNECTIONS BETWEEN THE DIFFERENT TYPES OF GROUNDING CONDUCTORS ABOVE GRADE SHALL BE MADE USING BOLTED GROUND CONNECTORS. GROUND LUGS SHALL BE PROVIDED IN ALL ENCLOSURES AND WIRING TERMINATION JUNCTION BOXES. EQUIPMENT GROUNDS AND GROUNDING CONDUCTOR SHALL BE CONNECTED TO THESE GROUND LUGS. FOR GROUND CONNECTIONS TO ENCLOSURES, CASES AND FRAMES OF ELECTRICAL EQUIPMENT NOT SUPPLIED WITH GROUND LUGS THE CONTRACTOR SHALL DRILL REQUIRED HOLES FOR MOUNTING A BOLTED GROUND CONNECTOR. ALL BOLTED GROUND CONNECTORS SHALL BE BURNDY, OR APPROVED EQUAL.

17. BOND ALL NONCURRENT–CARRYING PARTS OF METAL EQUIPMENT TO GROUND SYSTEM.

18. BUILDING STRUCTURAL STEEL SYSTEM SHALL BE BONDED TO ELECTRICAL GROUND SYSTEM.

19. INSTALL GROUNDING ELECTRODE CONDUCTORS, LIGHTNING PROTECTION DOWN CONDUCTORS AND SEPARATE GROUND CONDUCTORS IN SCHEDULE 40 OR SCHEDULE 80 PVC CONDUIT OR EXPOSED WHERE ACCEPTABLE TO LOCAL CODES. WHERE GROUNDING ELECTRODE CONDUCTORS, LIGHTNING PROTECTION DOWN CONDUCTORS OR INDIVIDUAL GROUND CONDUCTORS ARE RUN IN PVC CONDUIT, DO NOT COMPLETELY ENCIRCLE CONDUIT WITH FERROUS AND/OR MAGNETIC MATERIALS. USE NON–METALLIC REINFORCED FIBERGLASS STRUT SUPPORT. WHERE METAL CONDUIT CLAMPS ARE INSTALLED, USE NYLON BOLTS, NUTS, WASHERS AND SPACERS TO INTERRUPT A COMPLETE METALLIC PATH FROM ENCIRCLING THE CONDUIT. THIS IS REQUIRED TO AVOID GIRDLING OF GROUND CONDUCTORS. GIRDLING OF A GROUND CONDUCTOR IS THE RESULT OF PLACING THE CONDUCTOR IN A RING OF MAGNETIC MATERIAL. THIS RING COULD BE A METALLIC CONDUIT, U–BOLT OR STRUT SUPPORT PIPE CLAMP, OR OTHER SUPPORT HARDWARE. THE RESULT OF GIRDLING GROUND CONDUCTORS SIGNIFICANTLY INCREASES THE INDUCTIVE IMPEDANCE OF THE GROUND CONDUCTOR. INDUCTIVE AND CAPACITIVE IMPEDANCE IS A TYPE OF RESISTANCE THAT OPPOSES THE FLOW OF ALTERNATING CURRENT. ANY INCREASE IN THE IMPEDANCE OF A GROUND CONDUCTOR REDUCES ITS ABILITY TO EFFECTIVELY MITIGATE RADIO FREQUENCY NOISE IN THE GROUND SYSTEM. THE CONDITION WHERE A GROUND CONDUCTOR IS GIRDLED DURING A LIGHTNING STRIKE RESULTS IN PHENOMENA KNOWN AS SURGE IMPEDANCE LOADING. SURGE IMPEDANCE LOADING IS A RESULT OF VOLTAGE AND CURRENT REACHING 500,000 VOLTS AND 10,000 AMPS FOR A SHORT DURATION. GIRDLING FURTHER INCREASES THE IMPEDANCE AT LIGHTNING FREQUENCIES OF 100 KILOHERTZ TO 100 MEGAHERTZ. AT THESE POWER AND FREQUENCY LEVELS ANY INCREASE IN THE IMPEDANCE OF THE GROUND CONDUCTOR MUST BE CONTROLLED. DURING LIGHTNING DISCHARGE CONDITIONS A LOW INDUCTIVE IMPEDANCE PATH IS MORE IMPORTANT THAN A LOW DC RESISTANCE PATH.

20. IF LOCAL CODES DICTATE THAT INDIVIDUAL GROUNDING CONDUCTORS MUST BE RUN IN METAL CONDUIT OR RACEWAY, THEN THE CONDUIT OR RACEWAY MUST BE BONDED AT EACH END OF THE RUN WITH A BONDING JUMPER SIZED EQUAL TO THE INDIVIDUAL GROUNDING CONDUCTOR OR AS REQUIRED BY 2014 NEC 250–102. NOTE THIS DOES NOT APPLY TO AC EQUIPMENT GROUNDING CONDUCTORS RUN WITH AC CIRCUITS.

21. WHERE A CONFLICT IS DETERMINED WITH RESPECT TO GROUNDING REQUIREMENTS PER MANUFACTURER INSTALLATION INSTRUCTIONS, NEC, AND/OR THE CONTRACT DOCUMENTS, CONTACT THE RESIDENT ENGINEER OR PROJECT ENGINEER FOR FURTHER DIRECTIONS.

22. GROUND RODS SHALL BE MANUFACTURED IN THE UNITED STATES OF AMERICA FROM 100 PERCENT DOMESTIC STEEL TO COMPLY WITH THE AIRPORT IMPROVEMENT PROGRAM BUY AMERICAN REQUIREMENTS AND THE STEEL PRODUCTS PROCUREMENT ACT.

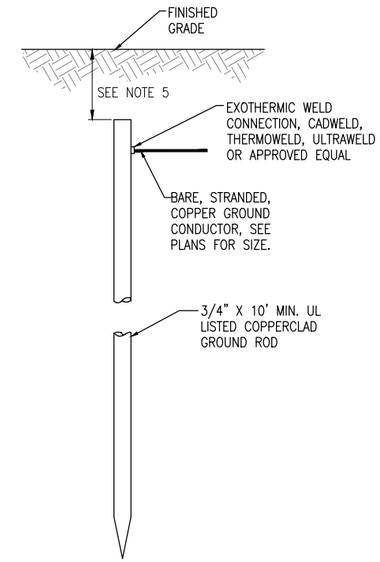

10 FT. GROUND ROD

NOTES

1. TYPE AND MINIMUM NUMBER OF GROUND RODS SHALL BE AS SPECIFIED ON THE PLAN.
2. THE RESISTANCE TO GROUND OF THE GROUNDING ELECTRODES FOR AIRFIELD LIGHTING, TAXI SIGNS, NAVAIDS, AND SPLICE CANS SHALL NOT EXCEED 25 OHMS.
3. COST OF GROUND RODS IS INCIDENTAL TO THE ASSOCIATED ITEMS REQUIRING GROUNDING UNLESS OTHERWISE SPECIFIED.
4. GROUND RODS SHALL BE SPACED AS DETAILED ON THE PLANS AND SHALL NOT BE SPACED LESS THAN ONE ROD LENGTH APART.
5. TOP OF GROUND RODS (USED FOR AIRFIELD LIGHTING, TAXI SIGNS, AND SPLICE CANS) SHALL BE 12" MINIMUM BELOW GRADE UNLESS DETAILED OTHERWISE HEREIN.
6. GROUND RODS FOR AIRFIELD LIGHTING, TAXI SIGNS, NAVAIDS AND SPLICE CANS SHALL BE A MINIMUM 3/4–INCH DIAMETER BY 10–FT LONG UL LISTED COPPER CLAD.

GROUND RODS
(NOT TO SCALE)

HANSON
Engineering | Planning | Allied Services

Offices Nationwide
www.hanson-inc.com

Hanson Professional Services Inc.
1525 S. 6th Street
Springfield, IL 62703
phone: 217-788-2450
fax: 217-788-2503

Illinois Licensed
Professional Service Corporation
#184-001084

ST. LOUIS
DOWNTOWN AIRPORT
Bi-State Development Agency
6100 Archview Drive
Cahokia, IL 62206-1445

LICENSED PROFESSIONAL ENGINEER
KEVIN N. LIGHTFOOT
062-047643
STATE OF ILLINOIS

Kevin N. Lightfoot
6/6/2017
EXPIRES: 11/30/2017
COVERING
ELECTRICAL DESIGN

TAXIWAY B RELOCATION,
PHASE 1:
FILLET IMPROVEMENTS

SBG No:
3-17-SBGP-133/134
IDA No: CPS-4505

Contract No. SD058

NO.	DATE	DESCRIPTION		
		DES	DWN	REV

ISSUE: JUNE 9, 2017
PROJECT NO: 16A0107
CAD FILE: E-003-NOTE.DWG
DESIGN BY: KNL 03/07/2017
DRAWN BY: CWS 03/08/2017
REVIEWED BY: BSS 03/23/17

SHEET TITLE

GROUNDING NOTES

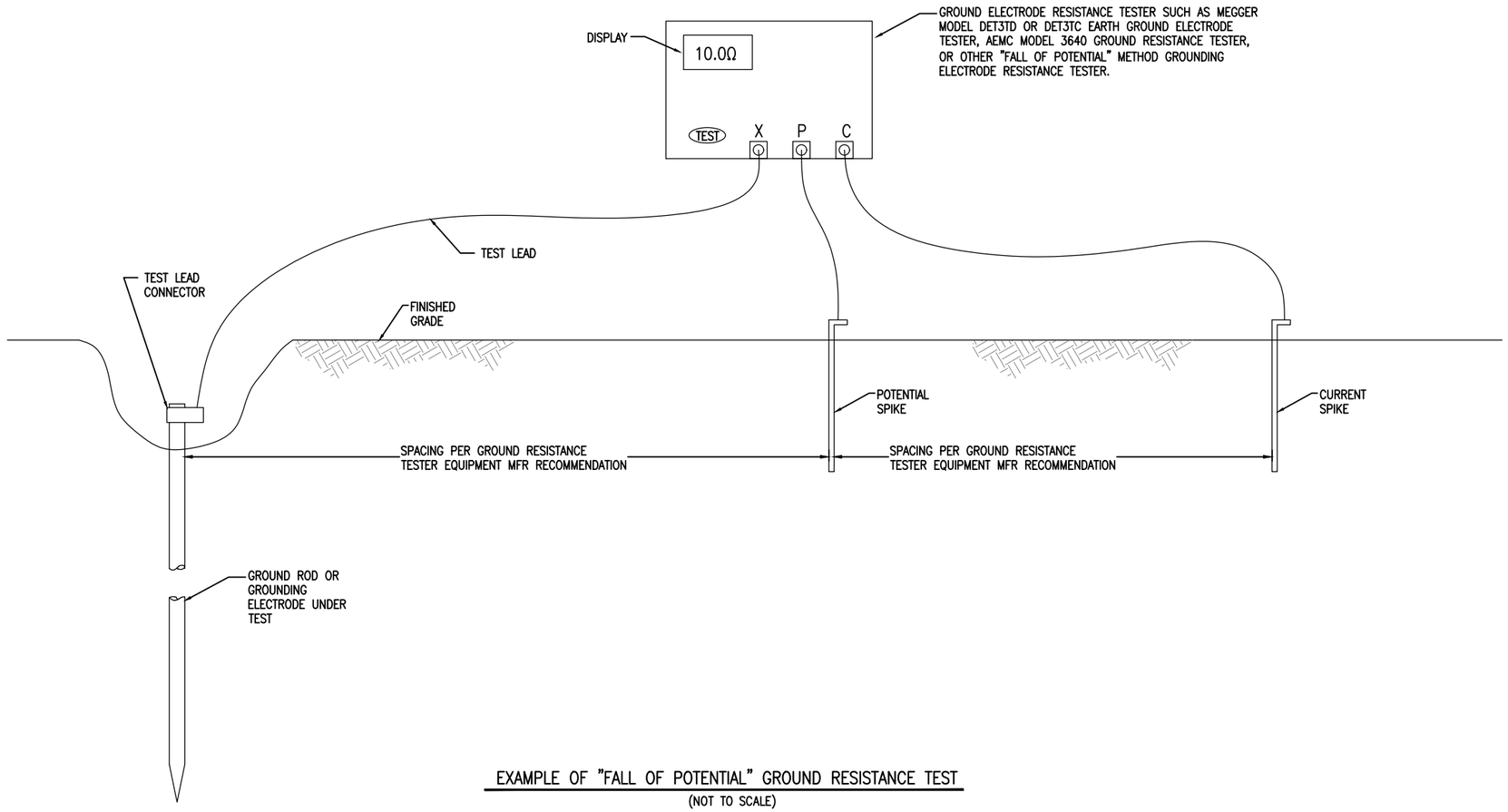

EXAMPLE OF "FALL OF POTENTIAL" GROUND RESISTANCE TEST

(NOT TO SCALE)

NOTES

1. CONTRACTOR SHALL TEST AND RECORD THE RESISTANCE FOR EACH MADE ELECTRODE GROUND ROD/GROUND FIELD/GROUND RING WITH AN INSTRUMENT SPECIFICALLY DESIGNED FOR TESTING GROUNDING ELECTRODE SYSTEMS. IF GROUND RESISTANCE EXCEEDS 25 OHMS, CONTACT THE PROJECT ENGINEER FOR FURTHER DIRECTION. COPIES OF GROUND ROD TEST RESULTS SHALL BE FURNISHED TO THE RESIDENT ENGINEER/RESIDENT TECHNICIAN.

2. FOR EACH AIRFIELD LIGHT FIXTURE, TAXI GUIDANCE SIGN, SPLICE CAN AND NAVAID THE CONTRACTOR SHALL TEST THE MADE ELECTRODE GROUND SYSTEM WITH AN INSTRUMENT SPECIFICALLY DESIGNED FOR TESTING GROUND SYSTEMS. TEST RESULTS SHALL BE RECORDED FOR EACH AIRFIELD LIGHT FIXTURE, TAXI GUIDANCE SIGN, AND NAVAIDS INSTALLATION. IF GROUND RESISTANCE EXCEEDS 25 OHMS, CONTACT THE PROJECT ENGINEER FOR FURTHER DIRECTION. COPIES OF THE GROUND SYSTEM TEST RESULTS SHALL BE FURNISHED TO THE RESIDENT ENGINEER / RESIDENT TECHNICIAN.

3. GROUND RESISTANCE TEST SHALL BE CONDUCTED IN ACCORDANCE WITH THE RESPECTIVE GROUND ELECTRODE RESISTANCE TESTING EQUIPMENT MANUFACTURER'S INSTRUCTIONS.

HANSON
Engineering | Planning | Allied Services

Offices Nationwide
www.hanson-inc.com

Hanson Professional Services Inc.
1525 S. 6th Street
Springfield, IL 62703
phone: 217-788-2450
fax: 217-788-2503

Illinois Licensed
Professional Service Corporation
#184-001084

ST. LOUIS
DOWNTOWN AIRPORT
Bi-State Development Agency
6100 Archview Drive
Cahokia, IL 62206-1445

LICENSED PROFESSIONAL ENGINEER
KEVIN N. LIGHTFOOT
062-047643
STATE OF ILLINOIS

Kevin N. Lightfoot
6/6/2017
EXPIRES: 11/30/2017
COVERING
ELECTRICAL DESIGN

TAXIWAY B RELOCATION,
PHASE 1:
FILLET IMPROVEMENTS

SBG No:
3-17-SBGP-133/134
IDA No: CPS-4505

Contract No. SD058

NO.	DATE	DESCRIPTION		
		DES	DWN	REV

ISSUE: JUNE 9, 2017
PROJECT NO: 16A0107
CAD FILE: E-507-DET.DWG
DESIGN BY: KNL 03/07/2017
DRAWN BY: CWS 03/08/2017
REVIEWED BY: BSS 03/23/17

SHEET TITLE

GROUND
RESISTANCE
TESTING DETAILS

JUN 09, 2017 1:47 PM HERND01562
I:\16JOBS\16A0107\16A0107D\CAD\AIRPORT\SHEET\E-507-DET.DWG

ELECTRICAL LEGEND – ONE-LINE DIAGRAM	
	CABLE TERMINATOR/LUG
	TRANSFORMER
	DISCONNECT SWITCH
	FUSIBLE DISCONNECT SWITCH
	CIRCUIT BREAKER
	THERMAL MAGNETIC CIRCUIT BREAKER
	FUSE
	TRANSIENT VOLTAGE SURGE SUPPRESSOR OR SURGE PROTECTOR DEVICE
	GROUND – GROUND ROD, GROUNDING ELECTRODE, OR AT EARTH POTENTIAL
	INDICATING LIGHT
M	MOTOR
#	LOAD, MOTOR, # = HORSEPOWER
	ELECTRIC UTILITY METER BASE
	JUNCTION BOX WITH SPLICE
XXX	EQUIPMENT, XXX = DEVICE DESCRIPTION
GND	GROUND BUS OR TERMINAL
S/N	NEUTRAL BUS
	PANELBOARD WITH MAIN LUGS
	PANELBOARD WITH MAIN BREAKER
	FUSE PANEL WITH MAIN FUSE PULLOUT
	DUPLEX RECEPTACLE 120V SINGLE PHASE GROUNDING TYPE
	CONTROL STATION
N EM L	TRANSFER SWITCH
G	ENGINE GENERATOR SET

ELECTRICAL LEGEND – SCHEMATIC	
	NORMALLY OPEN (N.O.) CONTACT
	NORMALLY CLOSED (N.C.) CONTACT
S*	STARTER COIL, * = STARTER NUMBER
OL	OVERLOAD RELAY CONTACT
CR*	CONTROL RELAY, * = CONTROL RELAY NUMBER
R*	RELAY, * = RELAY NUMBER
	TOGGLE SWITCH / 2 POSITION SWITCH
OFF AUTO OX	2-POSITION SELECTOR SWITCH
OFF HAND AUTO XOO OOX	3-POSITION SELECTOR SWITCH (H-O-A SHOWN)
	2 POLE DISCONNECT SWITCH
	3 POLE DISCONNECT SWITCH
	PHOTOCELL
	TERMINAL BLOCK, * = TERMINAL NUMBER
	DEVICE TERMINAL, * = DEVICE TERMINAL NUMBER
	INTERNAL PANEL WIRING
	FIELD WIRING
	FUSE
GND	GROUND BUS OR TERMINAL
S/N	NEUTRAL BUS
	GROUND, GROUND ROD, GROUND BUS
	INDUSTRIAL CONTROL RELAY OR LIGHTING CONTACTOR
P	S1 CUTOUT HANDLE REMOVED
I	S1 CUTOUT HANDLE INSERTED
	N.O. THERMAL SWITCH
	N.C. THERMAL SWITCH
	L-830 SERIES ISOLATION TRANSFORMER

ELECTRICAL ABBREVIATIONS	
A.F.F.	ABOVE FINISHED FLOOR
A, AMP	AMPERES
ATS	AUTOMATIC TRANSFER SWITCH
AWG	AMERICAN WIRE GAUGE
BKR	BREAKER
C	CONDUIT
CB	CIRCUIT BREAKER
CKT	CIRCUIT
CR	CONTROL RELAY
CU	COPPER
DPDT	DOUBLE POLE DOUBLE THROW
DPST	DOUBLE POLE SINGLE THROW
EM	EMERGENCY
EMT	ELECTRICAL METALLIC TUBING
ENCL	ENCLOSURE
EP	EXPLOSION PROOF
ES	EMERGENCY STOP
ETL	INTERTEK – ELECTRICAL TESTING LABS
ETM	ELAPSE TIME METER
GFCI	GROUND FAULT CIRCUIT INTERRUPTER
GFI	GROUND FAULT INTERRUPTER
GND	GROUND
GRSC	GALVANIZED RIGID STEEL CONDUIT
HID	HIGH INTENSITY DISCHARGE
HOA	HAND OFF AUTOMATIC
HP	HORSEPOWER
HPS	HIGH PRESSURE SODIUM
J	JUNCTION BOX
KVA	KILOVOLT AMPERE(S)
KW	KILOWATTS
LC	LIGHTING CONTACTOR
LTFMC	LIQUID TIGHT FLEXIBLE METAL CONDUIT (UL LISTED)
LTG	LIGHTING
LP	LIGHTING PANEL
MAX	MAXIMUM
MCB	MAIN CIRCUIT BREAKER
MCM	THOUSAND CIRCULAR MIL
MDP	MAIN DISTRIBUTION PANEL
MFR	MANUFACTURER
MH	METAL HALIDE
MIN	MINIMUM
MLO	MAIN LUGS ONLY
NEC	NATIONAL ELECTRICAL CODE (NFPA 70)
NC	NORMALLY CLOSED
NO	NORMALLY OPEN
NTS	NOT TO SCALE
OHE	OVERHEAD ELECTRIC
OL	OVERLOAD

ELECTRICAL ABBREVIATIONS (CONTINUED)	
PB	PULL BOX
PC	PHOTO CELL
PDB	POWER DISTRIBUTION BLOCK
PNL	PANEL
RCPT	RECEPTACLE
R	RELAY
S	STARTER
SPD	SURGE PROTECTION DEVICE
SPST	SINGLE POLE SINGLE THROW
TVSS	TRANSIENT VOLTAGE SURGE SUPPRESSOR
TYP	TYPICAL
UG	UNDERGROUND
UGE	UNDERGROUND ELECTRIC
UL	UNDERWRITER'S LABORATORIES
V	VOLTS
W/	WITH
W/O	WITHOUT
WP	WEATHER PROOF
XFER	TRANSFER
XFMR	TRANSFORMER

AIRPORT EQUIPMENT/FACILITY ABBREVIATIONS	
ASOS	AUTOMATED SURFACE OBSERVING SYSTEM
ATCT	AIR TRAFFIC CONTROL TOWER
AWOS	AUTOMATED WEATHER OBSERVING SYSTEM
CCR	CONSTANT CURRENT REGULATOR
DME	DISTANCE MEASURING EQUIPMENT
FAR	FEDERAL AVIATION REGULATION
GS	GLIDE SLOPE FACILITY
HIRL	HIGH INTENSITY RUNWAY LIGHT
ILS	INSTRUMENT LANDING SYSTEM
IM	INNER MARKER
LIR	LOW IMPACT-RESISTANT
LOC	LOCALIZER FACILITY
MALS	MEDIUM INTENSITY APPROACH LIGHTING SYSTEM
MALSR	MEDIUM INTENSITY APPROACH LIGHTING SYSTEM WITH RUNWAY ALIGNMENT INDICATING LIGHTS
MIRL	MEDIUM INTENSITY RUNWAY LIGHT
MITL	MEDIUM INTENSITY TAXIWAY LIGHT
NDB	NON-DIRECTIONAL BEACON
PAPI	PRECISION APPROACH PATH INDICATOR
PLASI	PULSE LIGHT APPROACH SLOPE INDICATOR
RAIL	RUNWAY ALIGNMENT INDICATING LIGHTS
REIL	RUNWAY END IDENTIFIER LIGHT
RVR	RUNWAY VISUAL RANGE
VADI	VISUAL APPROACH DESCENT INDICATOR
VASI	VISUAL APPROACH SLOPE INDICATOR
VOR	VERY HIGH FREQUENCY OMNIDIRECTIONAL RANGE FACILITY
WC	WIND CONE

NOTES:

1. ALL ELECTRICAL EQUIPMENT SHALL BE INSTALLED IN CONFORMANCE WITH NFPA 70 – NATIONAL ELECTRICAL CODE (NEC) MOST CURRENT ISSUE IN FORCE, THE RESPECTIVE EQUIPMENT MANUFACTURER'S DIRECTIONS AND ALL OTHER APPLICABLE LOCAL CODES, LAWS, ORDINANCES, AND REQUIREMENTS IN FORCE. ANY INSTALLATIONS WHICH VOID THE U.L. LISTING, INTERTEK TESTING SERVICES VERIFICATION/ETL LISTING (OR OTHER THIRD PARTY LISTING) AND/OR THE MANUFACTURER'S WARRANTY OF A DEVICE WILL NOT BE PERMITTED.

2. CONTRACTOR SHALL KEEP A COPY OF THE LATEST NEC IN FORCE ON SITE AT ALL TIMES DURING/CONSTRUCTION FOR USE AS A REFERENCE.

3. ALL VAULT WORK, POWER OUTAGES, AND/OR SHUT DOWN OF EXISTING SYSTEMS SHALL BE COORDINATED WITH THE AIRPORT MANAGER. ONCE SHUT DOWN, THE CIRCUITS SHALL BE LABELED AS SUCH TO PREVENT ACCIDENTAL ENERGIZING OF THE RESPECTIVE CIRCUITS. ALL PERSONNEL SHALL FOLLOW U.S. DEPARTMENT OF LABOR OCCUPATIONAL SAFETY & HEALTH ADMINISTRATION (OSHA) 29 CFR PART 1910 OCCUPATIONAL SAFETY & HEALTH STANDARDS FOR ELECTRICAL SAFETY AND LOCKOUT/TAGOUT PROCEDURES INCLUDING, BUT NOT LIMITED TO, 29 CFR SECTION 1910.147 THE CONTROL OF HAZARDOUS ENERGY (LOCKOUT/TAGOUT).

4. COLOR CODE PHASE AND NEUTRAL CONDUCTOR INSULATION FOR NO. 6 AWG OR SMALLER. PROVIDE COLORED INSULATION OR COLORED MARKING TAPE FOR PHASE AND NEUTRAL CONDUCTORS FOR NO. 4 AWG AND LARGER. INSULATED GROUND CONDUCTORS SHALL HAVE GREEN COLORED INSULATION FOR ALL CONDUCTOR AWG AND/OR KCMIL TO COMPLY WITH NEC 250.119. NEUTRAL CONDUCTORS SHALL HAVE WHITE COLORED INSULATION FOR NO. 6 AWG AND SMALLER TO MEET THE REQUIREMENTS OF NEC 200.6. STANDARD COLORS FOR POWER WIRING AND BRANCH CIRCUITS SHALL BE AS FOLLOWS:

   120/240 VAC, 1 PHASE, 3 WIRE

PHASE A	BLACK
PHASE B	RED
NEUTRAL	WHITE
GROUND	GREEN

5. SEE RESPECTIVE SITE PLANS FOR SITE LEGEND INFORMATION.

6. LTFMC DENOTES LIQUID TIGHT FLEXIBLE METAL CONDUIT UL LISTED, SUNLIGHT RESISTANT, & SUITABLE FOR GROUNDING. LIQUID TIGHT FLEXIBLE METAL CONDUIT AND ASSOCIATED FITTINGS SHALL BE U.L. LISTED TO MEET THE REQUIREMENTS OF NEC 350.6. LIQUID TIGHT FLEXIBLE METAL CONDUIT THAT IS USED FOR FLEXIBILITY (INCLUDING CONNECTIONS TO CCR'S & TRANSFORMERS) SHALL REQUIRE AN EXTERNAL BONDING JUMPER OR INTERNAL EQUIPMENT GROUNDING CONDUCTOR PER NEC 350.60. EXTERNAL BONDING JUMPERS USED WITH CCR INSTALLATIONS SHALL BE #6 AWG COPPER (MINIMUM). DO NOT INSTALL LTFMC THAT IS NOT UL LISTED. CONFIRM LTFMC BEARS THE UL LABEL PRIOR TO INSTALLATION.

7. 6.ALL ENCLOSURES RATED NEMA 4, 4X SHALL HAVE WATERTIGHT HUBS AT CONDUIT ENTRANCES UL LISTED NEMA 4, 4X FOR THE RESPECTIVE ENCLOSURE, TO MAINTAIN THE NEMA 4, 4X RATING.

8. CONTRACTOR SHALL FIELD VERIFY EXISTING SITE CONDITIONS. CONTRACTOR SHALL FIELD VERIFY RESPECTIVE CIRCUITS AND POWER SOURCES PRIOR TO REMOVING OR DISCONNECTING THE RESPECTIVE AIRFIELD LIGHTING, TAXI SIGN, NAVAID, OR OTHER DEVICE.

9. HIGH VOLTAGE CIRCUITS (AIRFIELD LIGHTING 5000 VOLT SERIES CIRCUITS AND OTHER CIRCUITS RATED ABOVE 600 VOLTS) AND LOW VOLTAGE CIRCUITS (RATED 600 VOLTS AND BELOW) SHALL NOT BE INSTALLED IN THE SAME WIREWAY, CONDUIT, DUCT, RACEWAY, JUNCTION STRUCTURE OR HANDHOLE.

HANSON
Engineering | Planning | Allied Services

Offices Nationwide
www.hanson-inc.com

Hanson Professional Services Inc.
1525 S. 6th Street
Springfield, IL 62703
phone: 217-788-2450
fax: 217-788-2503

Illinois Licensed
Professional Service Corporation
#184-001084

ST. LOUIS
DOWNTOWN AIRPORT
Bi-State Development Agency
6100 Archview Drive
Cahokia, IL 62206-1445

LICENSED PROFESSIONAL ENGINEER
KEVIN N. LIGHTFOOT
062-047643
STATE OF ILLINOIS

Kevin N. Lightfoot
6/6/2017
EXPIRES: 11/30/2017
COVERING
ELECTRICAL DESIGN

TAXIWAY B RELOCATION, PHASE 1:
FILLET IMPROVEMENTS

SBG No:
3-17-SBGP-133/134
IDA No: CPS-4505

Contract No. SD058

NO.	DATE	DESCRIPTION		
		DES	DWN	REV

ISSUE: JUNE 9, 2017
PROJECT NO: 16A0107
CAD FILE: E-004-LGND.DWG
DESIGN BY: KNL 03/07/2017
DRAWN BY: CWS 03/08/2017
REVIEWED BY: BSS 03/23/17

SHEET TITLE

ELECTRICAL LEGEND AND ABBREVIATIONS

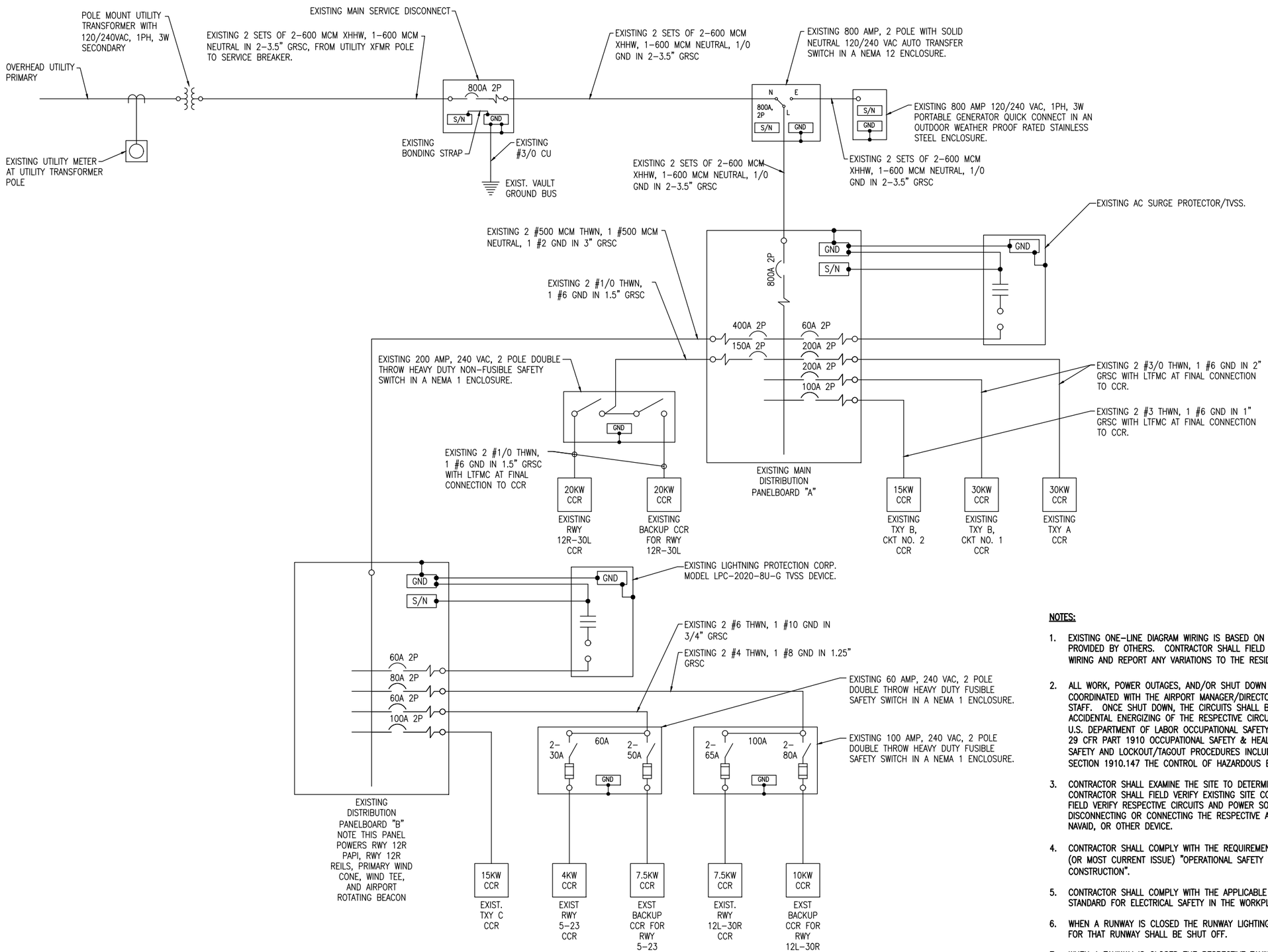

PROPOSED ELECTRICAL ONE-LINE DIAGRAM FOR AIRPORT VAULT

NOTES:

1. EXISTING ONE-LINE DIAGRAM WIRING IS BASED ON FIELD DATA AND INFORMATION PROVIDED BY OTHERS. CONTRACTOR SHALL FIELD VERIFY EXISTING CONDITIONS AND WIRING AND REPORT ANY VARIATIONS TO THE RESIDENT ENGINEER/TECHNICIAN.
2. ALL WORK, POWER OUTAGES, AND/OR SHUT DOWN OF EXISTING SYSTEMS SHALL BE COORDINATED WITH THE AIRPORT MANAGER/DIRECTOR AND THE AIRPORT MAINTENANCE STAFF. ONCE SHUT DOWN, THE CIRCUITS SHALL BE LABELED AS SUCH TO PREVENT ACCIDENTAL ENERGIZING OF THE RESPECTIVE CIRCUITS. ALL PERSONNEL SHALL FOLLOW U.S. DEPARTMENT OF LABOR OCCUPATIONAL SAFETY & HEALTH ADMINISTRATION (OSHA) 29 CFR PART 1910 OCCUPATIONAL SAFETY & HEALTH STANDARDS FOR ELECTRICAL SAFETY AND LOCKOUT/TAGOUT PROCEDURES INCLUDING, BUT NOT LIMITED TO, 29 CFR SECTION 1910.147 THE CONTROL OF HAZARDOUS ENERGY (LOCKOUT/TAGOUT).
3. CONTRACTOR SHALL EXAMINE THE SITE TO DETERMINE THE EXTENT OF THE WORK. CONTRACTOR SHALL FIELD VERIFY EXISTING SITE CONDITIONS. CONTRACTOR SHALL FIELD VERIFY RESPECTIVE CIRCUITS AND POWER SOURCES PRIOR TO REMOVING, DISCONNECTING OR CONNECTING THE RESPECTIVE AIRFIELD LIGHTING, TAXI SIGN, NAVAID, OR OTHER DEVICE.
4. CONTRACTOR SHALL COMPLY WITH THE REQUIREMENTS OF FAA AC NO. 150/5370-2F (OR MOST CURRENT ISSUE) "OPERATIONAL SAFETY ON AIRPORTS DURING CONSTRUCTION".
5. CONTRACTOR SHALL COMPLY WITH THE APPLICABLE REQUIREMENTS OF NFPA 70E - STANDARD FOR ELECTRICAL SAFETY IN THE WORKPLACE.
6. WHEN A RUNWAY IS CLOSED THE RUNWAY LIGHTING AND ASSOCIATED AIRFIELD NAVAIDS FOR THAT RUNWAY SHALL BE SHUT OFF.
7. WHEN A TAXIWAY IS CLOSED THE RESPECTIVE TAXIWAY LIGHTING SHALL BE SHUT OFF.

HANSON
Engineering | Planning | Allied Services

Offices Nationwide
www.hanson-inc.com

Hanson Professional Services Inc.
1525 S. 6th Street
Springfield, IL 62703
phone: 217-788-2450
fax: 217-788-2503

Illinois Licensed
Professional Service Corporation
#184-001084

ST. LOUIS DOWNTOWN AIRPORT
Bi-State Development Agency
6100 Archview Drive
Cahokia, IL 62206-1445

LICENSED PROFESSIONAL ENGINEER
KEVIN N. LIGHTFOOT
062-047643
STATE OF ILLINOIS

Kevin N. Lightfoot
6/6/2017
EXPIRES: 11/30/2017
COVERING
ELECTRICAL DESIGN

TAXIWAY B RELOCATION, PHASE 1:
FILLET IMPROVEMENTS

SBG No:
3-17-SBGP-133/134
IDA No: CPS-4505

Contract No. SD058

NO.	DATE	DESCRIPTION		
		DES	DWN	REV

ISSUE: JUNE 9, 2017
PROJECT NO: 16A0107
CAD FILE: E-601-ONLN.DWG
DESIGN BY: KNL 03/07/2017
DRAWN BY: CWS 03/08/2017
REVIEWED BY: BSS 03/23/17

SHEET TITLE

EXISTING ELECTRICAL ONE-LINE DIAGRAM FOR AIRPORT VAULT

JUN 09, 2017 1:48 PM HERND01562
I:\16JOBS\16A0107\16A0107D\CAD\AIRPORT\SHEET\E-601-ONLN.DWG

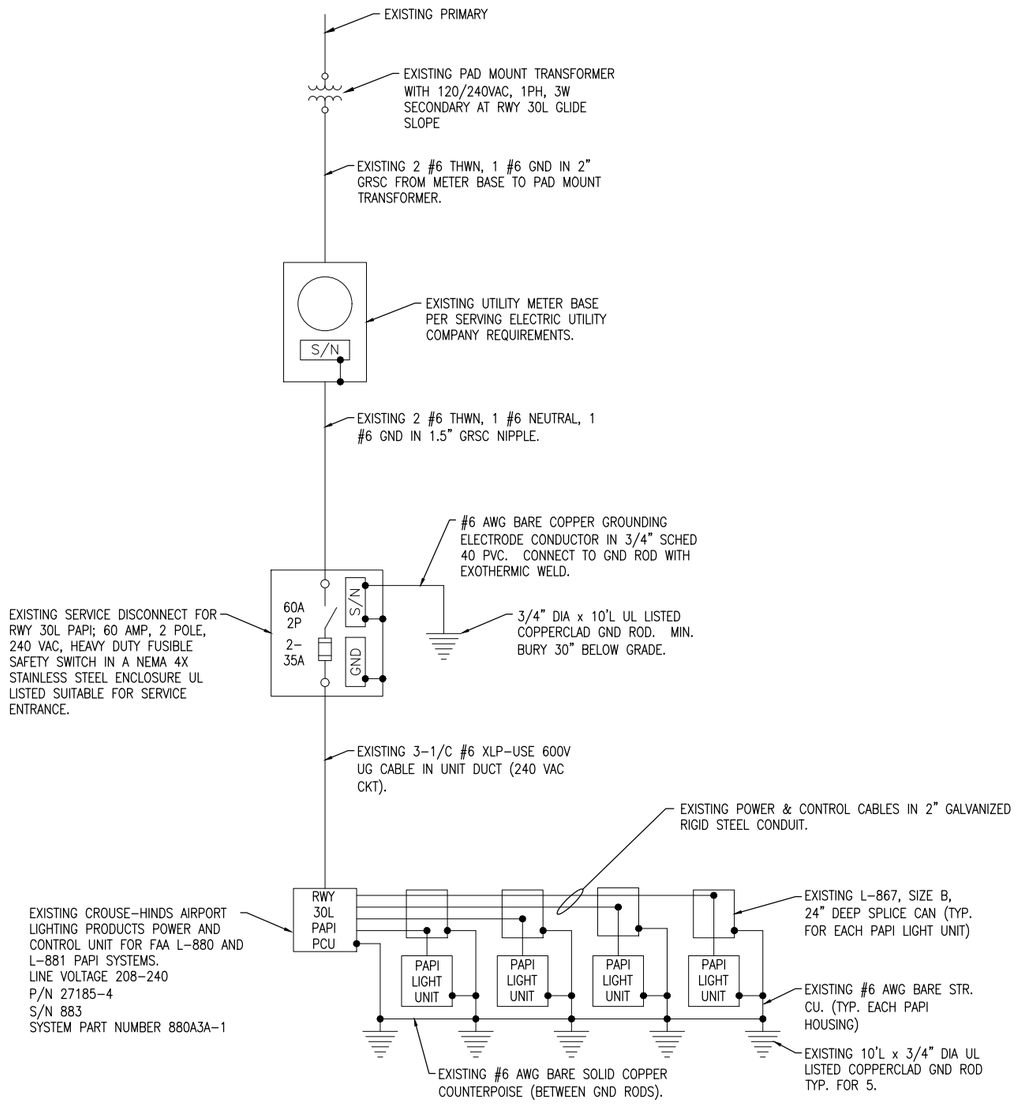

EXISTING ONE LINE DIAGRAM FOR RUNWAY 30L PAPI

NOT TO SCALE

NOTES:

1. EXISTING ONE-LINE DIAGRAM WIRING IS BASED ON FIELD DATA AND INFORMATION PROVIDED BY OTHERS. CONTRACTOR SHALL FIELD VERIFY EXISTING CONDITIONS AND WIRING AND REPORT ANY VARIATIONS TO THE RESIDENT ENGINEER/TECHNICIAN.
2. ALL WORK, POWER OUTAGES, AND/OR SHUT DOWN OF EXISTING SYSTEMS SHALL BE COORDINATED WITH THE AIRPORT MANAGER/DIRECTOR AND THE RESPECTIVE AIRPORT MAINTENANCE STAFF. ONCE SHUT DOWN, THE CIRCUITS SHALL BE LABELED AS SUCH TO PREVENT ACCIDENTAL ENERGIZING OF THE RESPECTIVE CIRCUITS. ALL PERSONNEL SHALL FOLLOW U.S. DEPARTMENT OF LABOR OCCUPATIONAL SAFETY & HEALTH ADMINISTRATION (OSHA) 29 CFR PART 1910 OCCUPATIONAL SAFETY & HEALTH STANDARDS FOR ELECTRICAL SAFETY AND LOCKOUT/TAGOUT PROCEDURES INCLUDING, BUT NOT LIMITED TO, 29 CFR SECTION 1910.147 THE CONTROL OF HAZARDOUS ENERGY (LOCKOUT/TAGOUT).
3. CONTRACTOR SHALL EXAMINE THE SITE TO DETERMINE THE EXTENT OF THE WORK. CONTRACTOR SHALL FIELD VERIFY EXISTING SITE CONDITIONS. CONTRACTOR SHALL FIELD VERIFY RESPECTIVE CIRCUITS AND POWER SOURCES PRIOR TO REMOVING, DISCONNECTING OR CONNECTING THE RESPECTIVE AIRFIELD LIGHTING, TAXI SIGN, NAVAID, OR OTHER DEVICE.
4. CONTRACTOR SHALL COMPLY WITH THE REQUIREMENTS OF FAA AC NO. 150/5370-2F (OR MOST CURRENT ISSUE) "OPERATIONAL SAFETY ON AIRPORTS DURING CONSTRUCTION".
5. CONTRACTOR SHALL COMPLY WITH THE APPLICABLE REQUIREMENTS OF NFPA 70E – STANDARD FOR ELECTRICAL SAFETY IN THE WORKPLACE.
6. WHEN A RUNWAY IS CLOSED THE RUNWAY LIGHTING AND ASSOCIATED AIRFIELD NAVAIDS FOR THAT RUNWAY SHALL BE SHUT OFF.

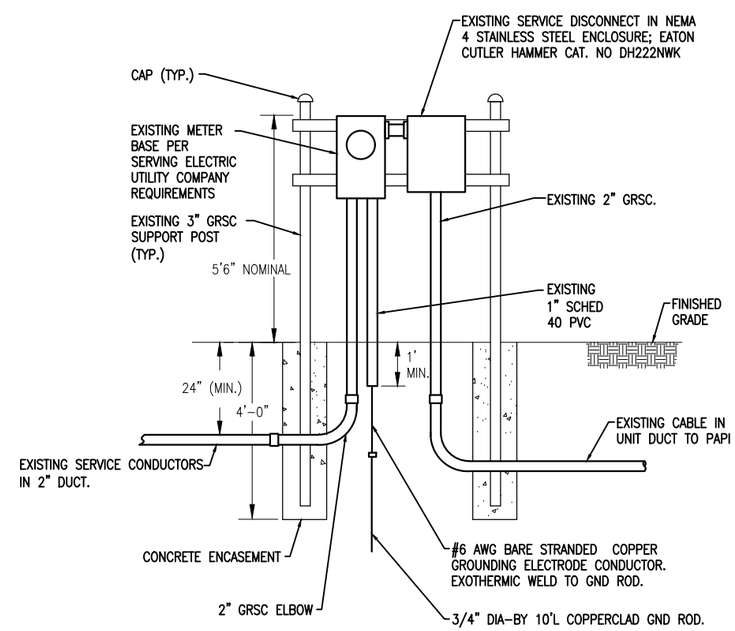

EXISTING SERVICE ENTRANCE ELEVATION

NOT TO SCALE

HANSON
Engineering | Planning | Allied Services

Offices Nationwide
www.hanson-inc.com

Hanson Professional Services Inc.
1525 S. 6th Street
Springfield, IL 62703
phone: 217-788-2450
fax: 217-788-2503

Illinois Licensed
Professional Service Corporation
#184-001084

ST. LOUIS
DOWNTOWN AIRPORT

Bi-State Development Agency
6100 Archview Drive
Cahokia, IL 62206-1445

LICENSED PROFESSIONAL ENGINEER
KEVIN N. LIGHTFOOT
062-047643
STATE OF ILLINOIS

Kevin N. Lightfoot
6/6/2017
EXPIRES: 11/30/2017
COVERING
ELECTRICAL DESIGN

TAXIWAY B RELOCATION, PHASE 1:
FILLET IMPROVEMENTS

SBG No:
3-17-SBGP-133/134
IDA No: CPS-4505

Contract No. SD058

NO.	DATE	DESCRIPTION		
		DES	DWN	REV

ISSUE: JUNE 9, 2017
PROJECT NO: 16A0107
CAD FILE: E-602-ONLN.DWG
DESIGN BY: KNL 03/07/2017
DRAWN BY: CWS 03/08/2017
REVIEWED BY: BSS 03/23/17

SHEET TITLE

EXISTING ELECTRICAL ONE-LINE DIAGRAM FOR RUNWAY 30L PAPI

JUN 09, 2017 1:48 PM HERND01562
I:\16JOBS\16A0107\16A0107D\CAD\AIRPORT\SHEET\E-602-ONLN.DWG

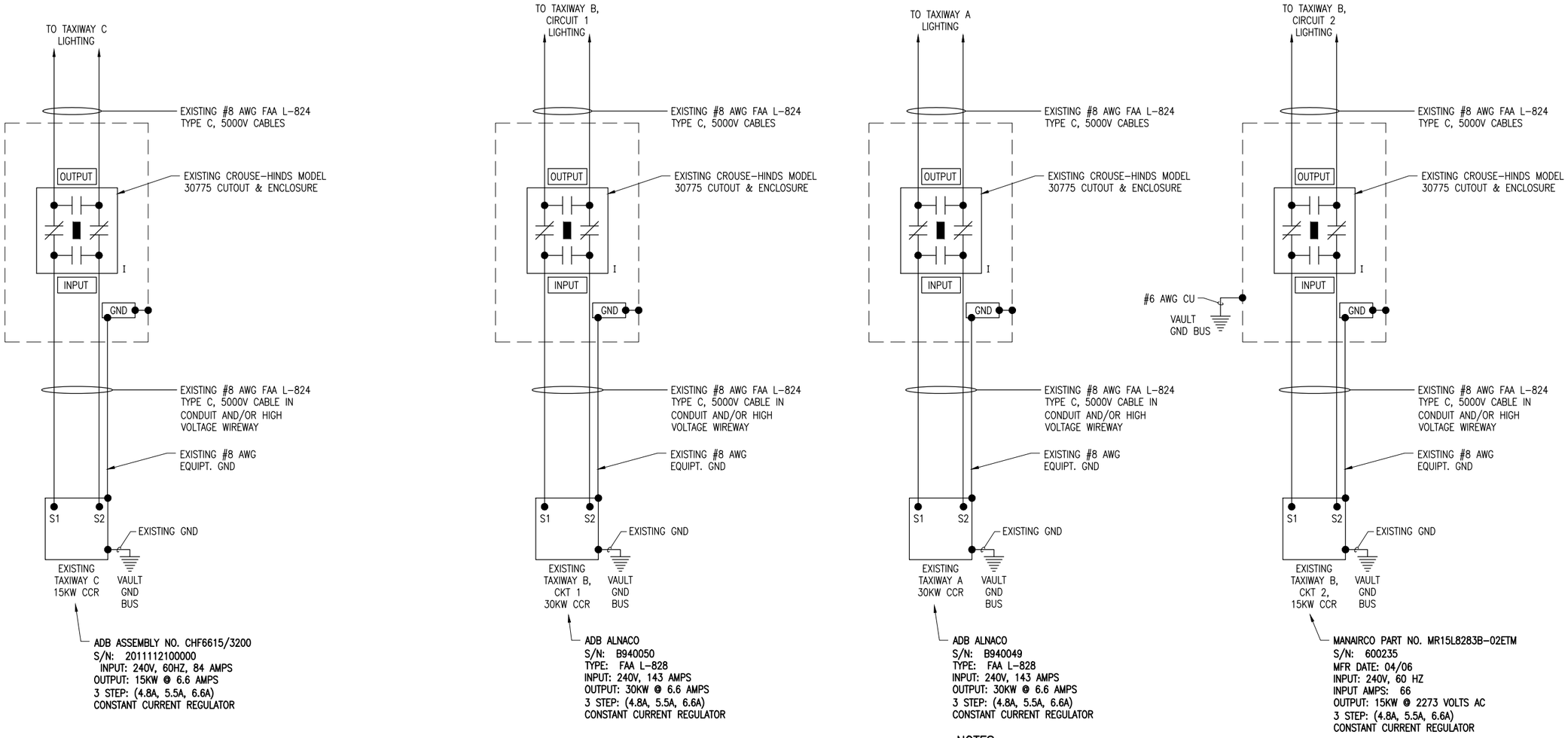

EXISTING HIGH VOLTAGE WIRING SCHEMATIC FOR TAXIWAYS

LEGEND

"I" DENOTES PLUG CUTOUT WITH PLUG INSERTED

"P" DENOTES PLUG CUTOUT WITH PLUG PULLED

"CCR" DENOTES CONSTANT CURRENT REGULATOR

NOTES:

1. ALL WORK, POWER OUTAGES, AND/OR SHUT DOWN OF EXISTING SYSTEMS SHALL BE COORDINATED WITH THE AIRPORT MANAGER/DIRECTOR AND RESIDENT ENGINEER/TECHNICIAN. ONCE SHUT DOWN, THE CIRCUITS SHALL BE LABELED AS SUCH TO PREVENT ACCIDENTAL ENERGIZING OF THE RESPECTIVE CIRCUITS. ALL PERSONNEL SHALL FOLLOW U.S. DEPARTMENT OF LABOR OCCUPATIONAL SAFETY & HEALTH ADMINISTRATION (OSHA) 29 CFR PART 1910 OCCUPATIONAL SAFETY & HEALTH STANDARDS FOR ELECTRICAL SAFETY AND LOCKOUT/TAGOUT PROCEDURES INCLUDING, BUT NOT LIMITED TO, 29 CFR SECTION 1910.147 THE CONTROL OF HAZARDOUS ENERGY (LOCKOUT/TAGOUT).
2. CONTRACTOR SHALL EXAMINE THE SITE TO CONFIRM AND FIELD VERIFY EXISTING SITE CONDITIONS.
3. THE RESPECTIVE PERSONNEL PERFORMING AIRFIELD LIGHTING WORK, VAULT WORK, AND/OR TESTS SHALL BE FAMILIAR WITH, AND QUALIFIED TO WORK ON, 5000 VOLT AIRFIELD LIGHTING SERIES CIRCUITS, CONSTANT CURRENT REGULATORS, AND ASSOCIATED AIRPORT ELECTRICAL VAULT EQUIPMENT.
4. CONTRACTOR SHALL EXERCISE CAUTION, PRACTICE SAFETY, AND DISCONNECT THE SERIES CIRCUITS FROM THE RESPECTIVE CONSTANT CURRENT REGULATORS, AS APPLICABLE WHEN PERFORMING WORK ON THE AIRFIELD LIGHTING OR WORK THAT MIGHT AFFECT THE AIRFIELD LIGHTING. CONTRACTOR SHALL MAKE NECESSARY ARRANGEMENTS TO DISCONNECT POWER AND LOCKOUT CIRCUITS FOR PROTECTION OF PERSONNEL.
5. MEGGER TEST (WITH AN INSULATION RESISTANCE TESTER) AND RECORD EXISTING SERIES CIRCUITS PRIOR TO CABLE WORK AND AGAIN AFTER AIRFIELD LIGHTING MODIFICATIONS, ADDITIONS, AND/OR UPGRADES HAVE BEEN COMPLETED. ALSO TEST AND RECORD SERIES CIRCUIT LOOP RESISTANCE, (WITH AN OHMMETER).
6. TAXIWAY "A" CCR, TAXIWAY "B" CIRCUIT 1 CCR, TAXIWAY "B" CIRCUIT 2 CCR, AND TAXIWAY "C" CCR AND THE ASSOCIATED CUTOUTS ARE EXISTING.
7. THE RESPECTIVE RUNWAY AND TAXIWAY LIGHTING CCR'S SHALL BE TESTED FOR PROPER OPERATION BEFORE REMOVAL WORK, MODIFICATIONS, AND/OR ADDITIONS AND AFTER THE NEW CABLES AND LIGHTING SYSTEM MODIFICATIONS AND ADDITIONS HAVE BEEN COMPLETED. CONTRACTOR SHALL TEST AND RECORD THE INPUT CURRENT AND OUTPUT CURRENT FOR EACH CONSTANT CURRENT REGULATOR IN THE AUTOMATIC AND MANUAL MODES OF OPERATIONS. CONTRACTOR SHALL REPORT CONCERNS AND/OR DEFICIENCIES TO THE RESIDENT ENGINEER/ TECHNICIAN. TEST RESULTS SHALL BE PROVIDED TO THE PROJECT ENGINEER AND RESIDENT ENGINEER/TECHNICIAN.

HANSON
Engineering | Planning | Allied Services
Offices Nationwide
www.hanson-inc.com

Hanson Professional Services Inc.
1525 S. 6th Street
Springfield, IL 62703
phone: 217-788-2450
fax: 217-788-2503

Illinois Licensed
Professional Service Corporation
#184-001084

ST. LOUIS DOWNTOWN AIRPORT
Bi-State Development Agency
6100 Archview Drive
Cahokia, IL 62206-1445

LICENSED PROFESSIONAL ENGINEER
KEVIN N. LIGHTFOOT
062-047643
STATE OF ILLINOIS

Kevin N. Lightfoot
6/6/2017
EXPIRES: 11/30/2017
COVERING
ELECTRICAL DESIGN

TAXIWAY B RELOCATION, PHASE 1:
FILLET IMPROVEMENTS

SBG No:
3-17-SBGP-133/134
IDA No: CPS-4505

Contract No. SD058

NO.	DATE	DESCRIPTION		
		DES	DWN	REV

ISSUE: JUNE 9, 2017
PROJECT NO: 16A0107
CAD FILE: E-603-SCM.DWG
DESIGN BY: KNL 03/07/2017
DRAWN BY: CWS 03/08/2017
REVIEWED BY: BSS 03/23/17

SHEET TITLE

EXISTING HIGH VOLTAGE WIRING SCHEMATIC FOR TAXIWAYS

JUN 09, 2017 1:49 PM HERND01562
I:\16JOBS\16A0107\16A0107\DICAD\AIRPORT\SHEET\E-603-SCM.DWG

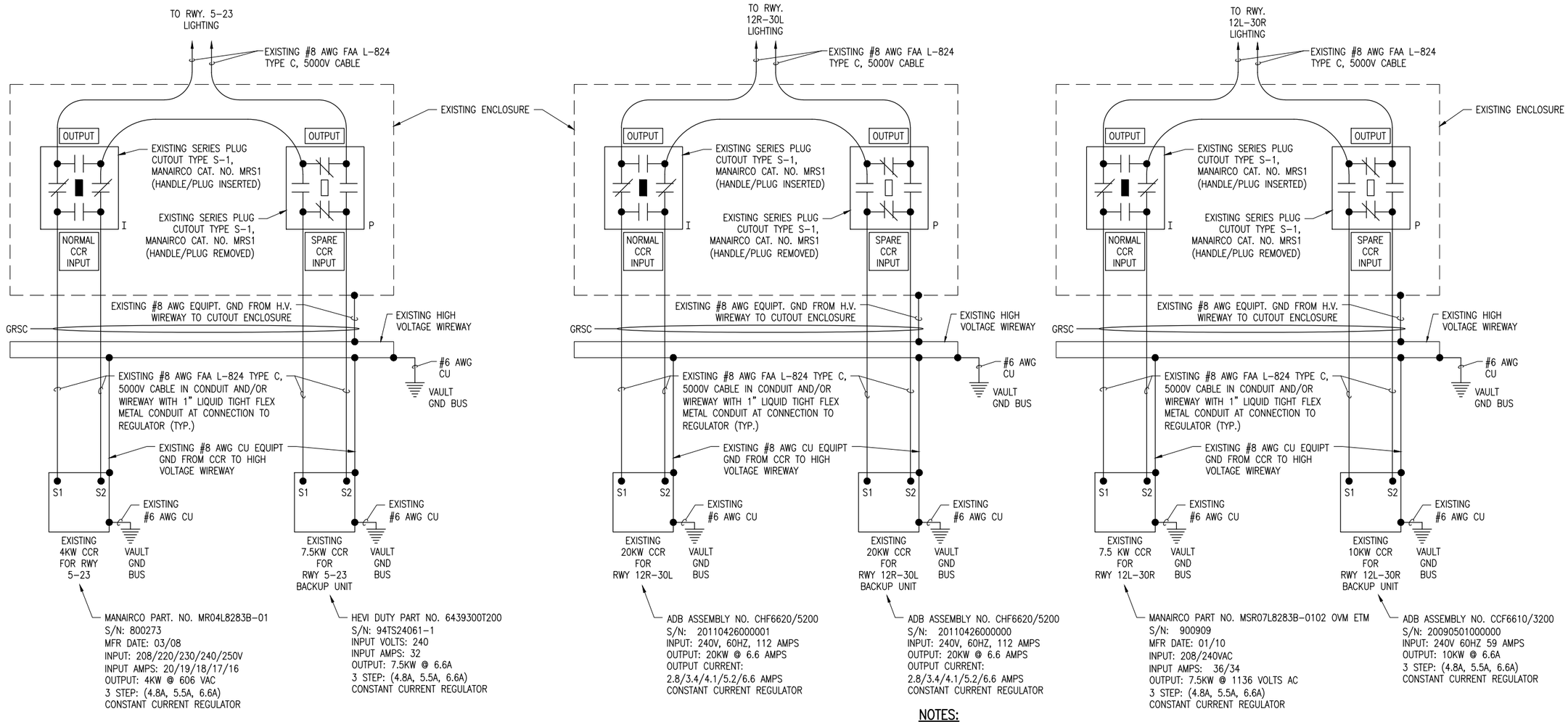

EXISTING HIGH VOLTAGE WIRING SCHEMATIC FOR RUNWAYS

LEGEND

"I" DENOTES PLUG CUTOUT WITH PLUG INSERTED

"P" DENOTES PLUG CUTOUT WITH PLUG PULLED

"CCR" DENOTES CONSTANT CURRENT REGULATOR

NOTES:

1. ALL WORK, POWER OUTAGES, AND/OR SHUT DOWN OF EXISTING SYSTEMS SHALL BE COORDINATED WITH THE AIRPORT MANAGER/DIRECTOR AND RESIDENT ENGINEER/TECHNICIAN. ONCE SHUT DOWN, THE CIRCUITS SHALL BE LABELED AS SUCH TO PREVENT ACCIDENTAL ENERGIZING OF THE RESPECTIVE CIRCUITS. ALL PERSONNEL SHALL FOLLOW U.S. DEPARTMENT OF LABOR OCCUPATIONAL SAFETY & HEALTH ADMINISTRATION (OSHA) 29 CFR PART 1910 OCCUPATIONAL SAFETY & HEALTH STANDARDS FOR ELECTRICAL SAFETY AND LOCKOUT/TAGOUT PROCEDURES INCLUDING, BUT NOT LIMITED TO, 29 CFR SECTION 1910.147 THE CONTROL OF HAZARDOUS ENERGY (LOCKOUT/TAGOUT).
2. CONTRACTOR SHALL EXAMINE THE SITE TO CONFIRM AND FIELD VERIFY EXISTING SITE CONDITIONS.
3. THE RESPECTIVE PERSONNEL PERFORMING AIRFIELD LIGHTING WORK, VAULT WORK, AND/OR TESTS SHALL BE FAMILIAR WITH, AND QUALIFIED TO WORK ON, 5000 VOLT AIRFIELD LIGHTING SERIES CIRCUITS, CONSTANT CURRENT REGULATORS, AND ASSOCIATED AIRPORT ELECTRICAL VAULT EQUIPMENT.
4. CONTRACTOR SHALL EXERCISE CAUTION, PRACTICE SAFETY, AND DISCONNECT THE SERIES CIRCUITS FROM THE RESPECTIVE CONSTANT CURRENT REGULATORS, AS APPLICABLE WHEN PERFORMING WORK ON THE AIRFIELD LIGHTING OR WORK THAT MIGHT AFFECT THE AIRFIELD LIGHTING. CONTRACTOR SHALL MAKE NECESSARY ARRANGEMENTS TO DISCONNECT POWER AND LOCKOUT CIRCUITS FOR PROTECTION OF PERSONNEL.
5. MEGGER TEST (WITH AN INSULATION RESISTANCE TESTER) AND RECORD EXISTING SERIES CIRCUITS PRIOR TO CABLE WORK AND AGAIN AFTER AIRFIELD LIGHTING MODIFICATIONS, ADDITIONS, AND/OR UPGRADES HAVE BEEN COMPLETED. ALSO TEST AND RECORD SERIES CIRCUIT LOOP RESISTANCE, (WITH AN OHMMETER).
6. RUNWAY 5-23 CCR, BACKUP CCR FOR RUNWAY 5-23, RUNWAY 12R-30L CCR, BACKUP CCR FOR RUNWAY 12R-30L, RUNWAY 12L-30R CCR, AND BACKUP CCR FOR RUNWAY 12L-30R AND THE ASSOCIATED CUTOUTS ARE EXISTING.
7. THE RESPECTIVE RUNWAY AND TAXIWAY LIGHTING CCR'S SHALL BE TESTED FOR PROPER OPERATION BEFORE REMOVAL WORK, MODIFICATIONS, AND/OR ADDITIONS AND AFTER THE NEW CABLES AND LIGHTING SYSTEM MODIFICATIONS AND ADDITIONS HAVE BEEN COMPLETED. CONTRACTOR SHALL TEST AND RECORD THE INPUT CURRENT AND OUTPUT CURRENT FOR EACH CONSTANT CURRENT REGULATOR IN THE AUTOMATIC AND MANUAL MODES OF OPERATIONS. CONTRACTOR SHALL REPORT CONCERNS AND/OR DEFICIENCIES TO THE RESIDENT ENGINEER/ TECHNICIAN. TEST RESULTS SHALL BE PROVIDED TO THE PROJECT ENGINEER AND RESIDENT ENGINEER/TECHNICIAN.

HANSON
Engineering | Planning | Allied Services

Offices Nationwide
www.hanson-inc.com

Hanson Professional Services Inc.
1525 S. 6th Street
Springfield, IL 62703
phone: 217-788-2450
fax: 217-788-2503

Illinois Licensed
Professional Service Corporation
#184-001084

ST. LOUIS DOWNTOWN AIRPORT
Bi-State Development Agency
6100 Archview Drive
Cahokia, IL 62206-1445

LICENSED PROFESSIONAL ENGINEER
KEVIN N. LIGHTFOOT
062-047643
STATE OF ILLINOIS

Kevin N. Lightfoot
6/6/2017
EXPIRES: 11/30/2017
COVERING
ELECTRICAL DESIGN

TAXIWAY B RELOCATION, PHASE 1:
FILLET IMPROVEMENTS

SBG No:
3-17-SBGP-133/134
IDA No: CPS-4505

Contract No. SD058

NO.	DATE	DESCRIPTION		
		DES	DWN	REV

ISSUE: JUNE 9, 2017
PROJECT NO: 16A0107
CAD FILE: E-604-SCHM.DWG
DESIGN BY: KNL 03/07/2017
DRAWN BY: CWS 03/08/2017
REVIEWED BY: BSS 03/23/17

SHEET TITLE

EXISTING HIGH VOLTAGE WIRING SCHEMATIC FOR RUNWAYS

JUN 09, 2017 1:49 PM HERND01562
I:\16JOBS\16A0107\16A0107D\CAD\AIRPORT\SHEET\E-604-SCHM.DWG