F.A.P. RTE.	SECTION	COUNTY	TOTAL SHEETS	SHEET NO.
575	14-B-R-1&15N-3	WILL	143	12
STA.	TO STA.			
FED. ROAD DIST. NO.	ILLINOIS	FED. AID PROJECT		

CONTRACT # 62098

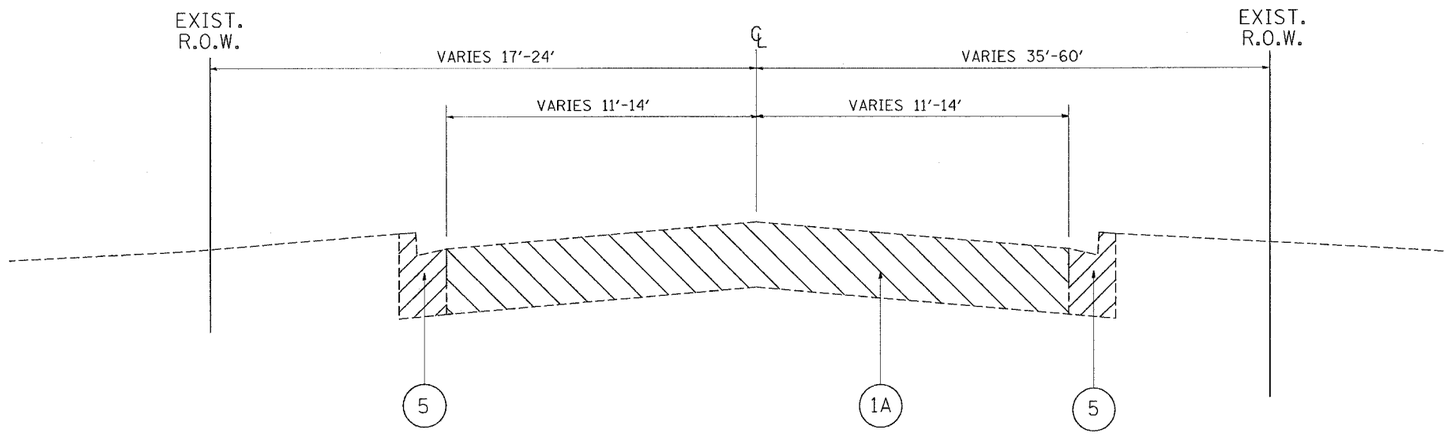

EXISTING TYPICAL SECTION
LILY CACHE ROAD
STA. 108+61 TO STA. 110+47

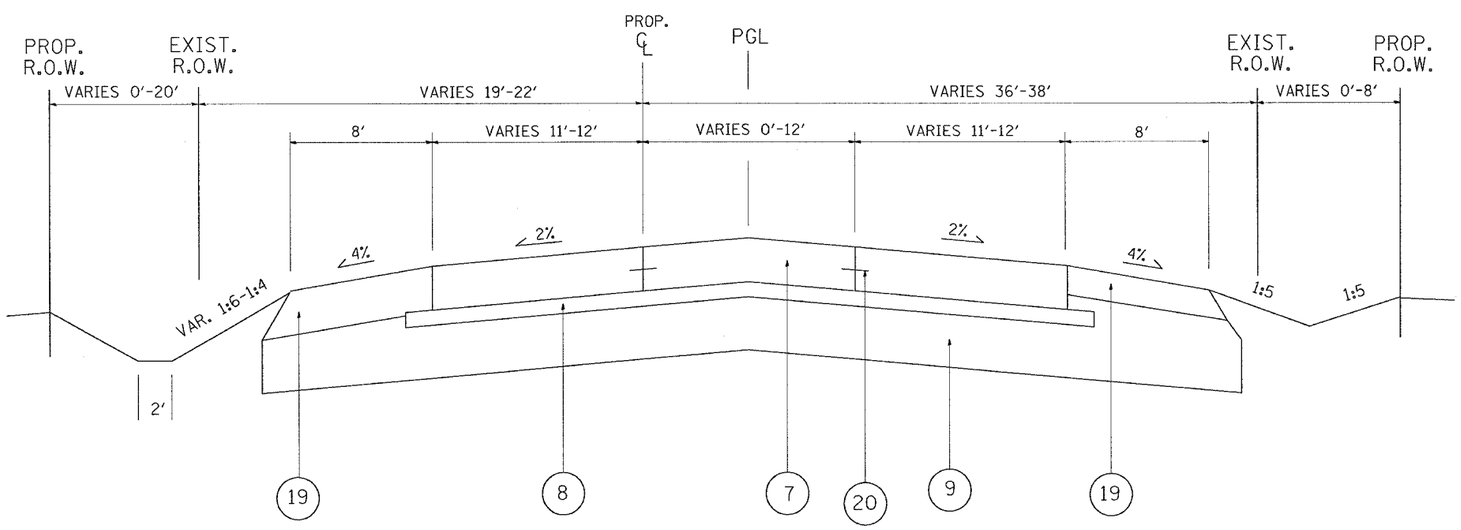

PROPOSED TYPICAL SECTION
LILY CACHE ROAD
STA. 108+61 TO STA. 110+47

LEGEND

1. EXISTING PAVEMENT (US 30), ± 14"
1A. EXISTING PAVEMENT (LILY CACHE RD), ± 8"
2. EXISTING BITUMINOUS SHOULDER
3. PROPOSED PAVEMENT REMOVAL
4. PROPOSED SHOULDER REMOVAL
5. PROPOSED CURB AND GUTTER REMOVAL
6. PROPOSED BITUMINOUS SURFACE REMOVAL, VARIABLE DEPTH 3/4" TO 2 1/2"
7. PROPOSED JOINTED PORTLAND CEMENT CONCRETE, 10 1/2 "
8. PROPOSED BITUMINOUS STABILIZED SUB-BASE, 4"
9. PROPOSED AGGREGATE SUB-GRADE, 12"
10. PROPOSED BITUMINOUS CONCRETE BINDER COURSE, IL-19.0, N70, 12" (WIDENING 12 1/2 ")
11. PROPOSED BITUMINOUS CONCRETE BINDER COURSE, SUPERPAVE, IL-19.0, N50, 7 1/4 "
12. PROPOSED POLYMERIZED LEVELING BINDER (MACHINE METHOD), IL-4.75, N50, (VARIES 3/4 " TO 1 1/2 ")
13. PROPOSED BITUMINOUS CONCRETE SURFACE COURSE, MIX "D", N70, 2" (RESURFACING + WIDENING USE 1 1/2 ")
14. PROPOSED BITUMINOUS CONCRETE SURFACE COURSE, SUPERPAVE, MIX "C", N50, 1 1/2 "
15. PROPOSED BITUMINOUS CONCRETE SURFACE COURSE, SUPERPAVE, MIX "D", N70, 1 1/2 "
16. PROPOSED BITUMINOUS SHOULDER, 8"
17. PROPOSED AGGREGATE SHOULDER, TYPE B
18. PROPOSED RETAINING WALL (STA. 29+08 TO STA. 32+92)
19. PROPOSED BITUMINOUS SHOULDER, 12"
20. PROPOSED NO. 6 EPOXY COATED DEFORMED BARS AT 24" CENTERS INCLUDED IN THE COST OF THE PROPOSED PAVEMENT

REVISIONS	
NAME	DATE

ILLINOIS DEPARTMENT OF TRANSPORTATION

U.S. ROUTE 30
@ LILY CACHE ROAD
EXISTING/ PROPOSED
TYPICAL SECTIONS

SCALE: VERT. HORIZ.
DATE
DRAWN BY
CHECKED BY

PLOT DATE = 5/20/2005
FILE NAME = c:\pw_work\d14278\
PLOT SCALE = 50.0000 ' / IN.
REFERENCE = REF

: 07:28:10 05/20/2005