ROUTE NO.	SECTION	COUNTY	TOTAL SHEETS	SHEET NO.
F.A.P. 0575	14BR	WILL	143	78
FED. ROAD DIST. NO. 7	ILLINOIS	FED. AID PROJECT-		

SHEET NO. S-14

Contract No. 62098

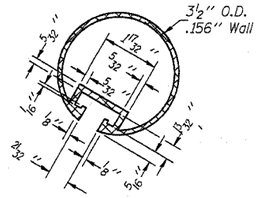

SECTION THRU TOP RAIL

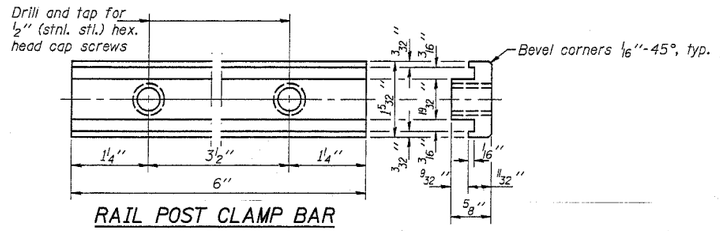

RAIL POST CLAMP BAR

For Top Rail

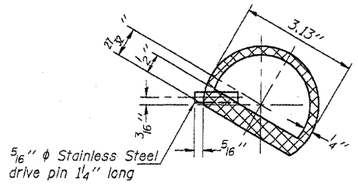

SECTION THRU SPLICE

For Top Rail

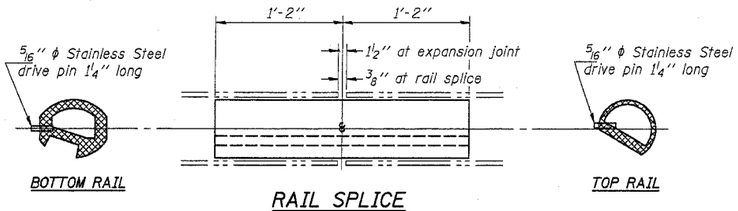

BOTTOM RAIL

RAIL SPLICE

TOP RAIL

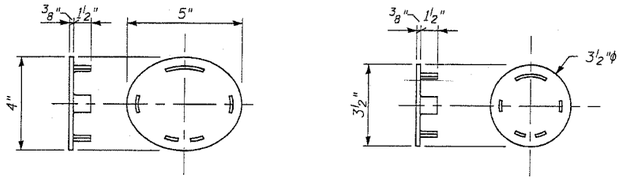

DETAIL A

Drive fit end cap
3 Required

DETAIL B

Drive fit end cap
3 Required

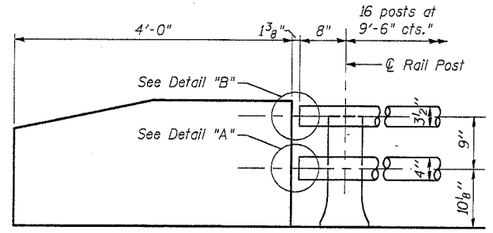

ELEVATION

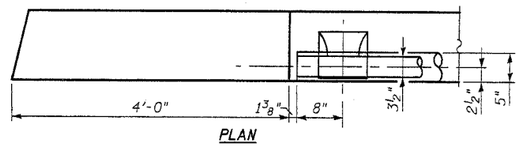

PLAN

TYPICAL END OF RAIL

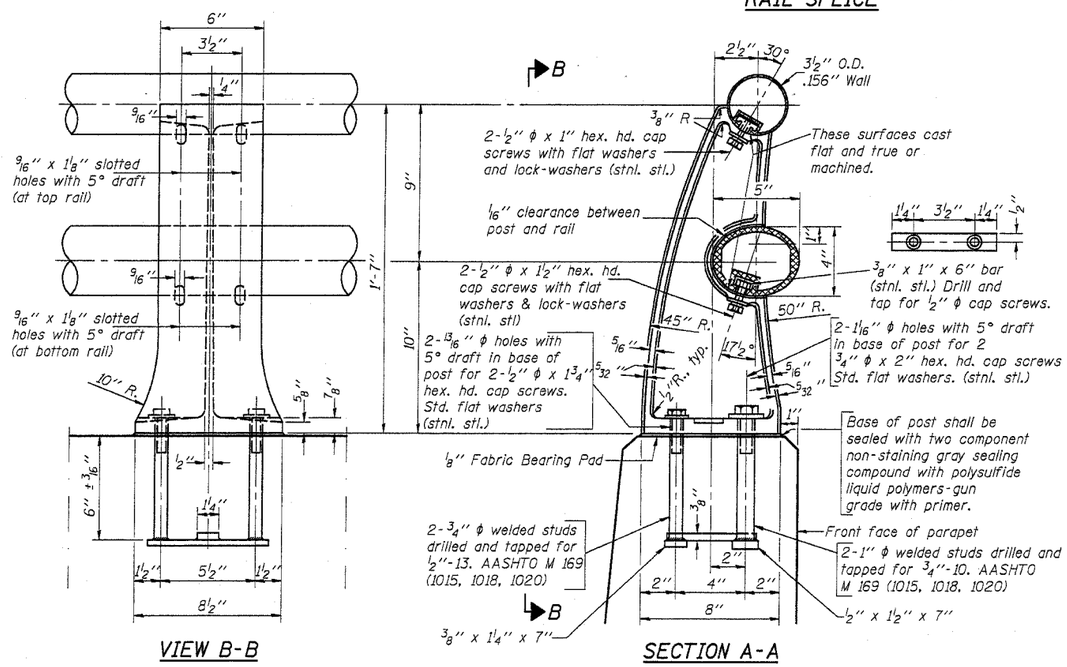

RAIL POST DETAILS

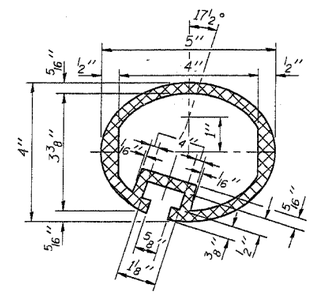

SEC. THRU ELLIPTICAL RAIL SECTION

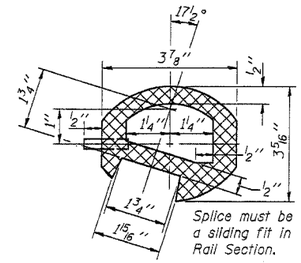

SEC. THRU SPLICE

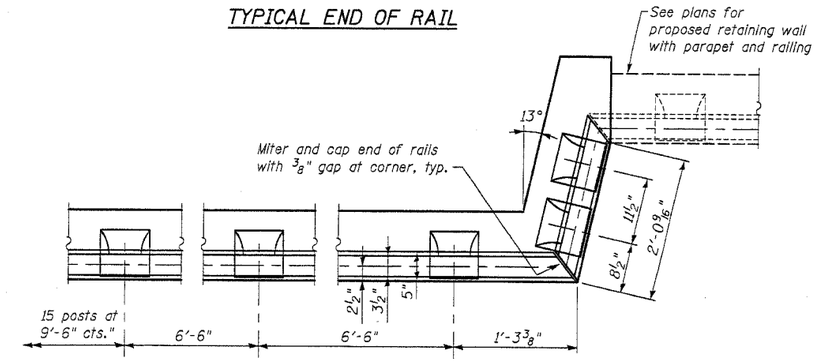

EAST END OF NORTH RAIL

Notes:

All Posts shall be normal to parapet.

All Aluminum Alloy Extruded Rail shall be supplied in modular lengths of 30 feet, except at the end of bridge or over open joints in bridge deck where the rail shall be attached to a minimum of 2 posts. If the rail is on a horizontal curve of 2300 foot radius or less, the modular lengths may be reduced but shall be attached to a minimum of 2 posts.

All joints in rail shall be spliced per detail.

Provide 1-⅛" and 2-1/16" Aluminum Shims for 25% of the Posts. Rail elements shall be parallel to Grade-high spots will be ground and low spots shimmed.

Railing shall be according to Section 509 of the Standard Specifications, except as noted, and will be paid for at the contract unit price per foot for ALUMINUM RAILING, TYPE L.

Aluminum alloy rail shall conform to ASTM B 221 alloy 6061-T6 or 6351-T5 with min. yield 35 ksi, min. tensile 38 ksi, and elongation of 10% in 2 inches.

BILL OF MATERIAL

Item	Unit	Quantity
Aluminum Railing, Type L	Foot	294

DESIGNED	MJM
CHECKED	WHE
DRAWN	EAB
CHECKED	WHE

LONCO, INC.
CONSULTING ENGINEERS 630 NORTH WASHINGTON ST., SUITE 205
NAPERVILLE, ILLINOIS 60563 (630) 577-9100

REVISIONS	
NAME	DATE

ILLINOIS DEPARTMENT OF TRANSPORTATION

TYPE L ALUMINUM RAILING DETAILS

US ROUTE 30 (LINCOLN HIGHWAY)
OVER LILY CACHE CREEK
WILL COUNTY

F.A.P. ROUTE 0575 SEC. 14BR
STATION 28+22.14 NEW STRUCTURE NO. 099-4648
DATE 03/24/05