RTE.#	SECTION	COUNTY	TOTAL SHEETS	SHEET NO.
CH	A47	LAKE	176	162
STA.		TO STA.		
03-00088-00-FP	ILLINOIS	SURFACE TRANSPORTATION FUNDING		

CONTRACT NUMBER 83807

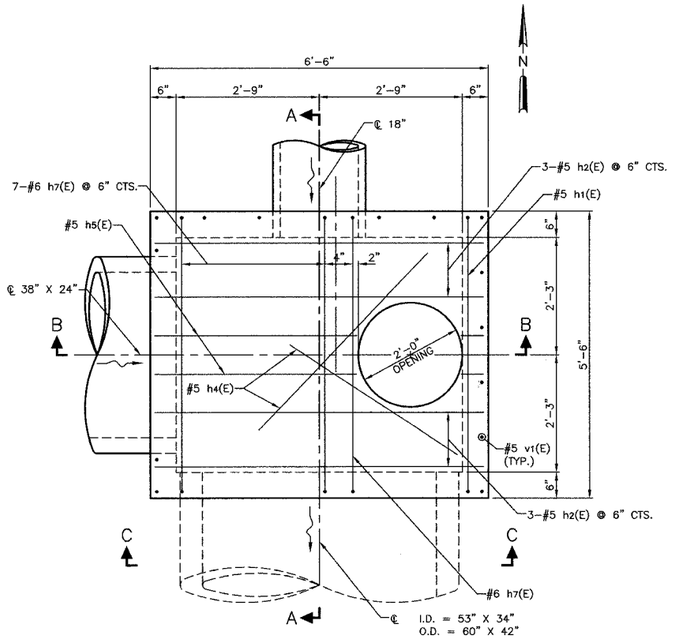

PLAN
(SHOWING TOP SLAB REINFORCEMENT)

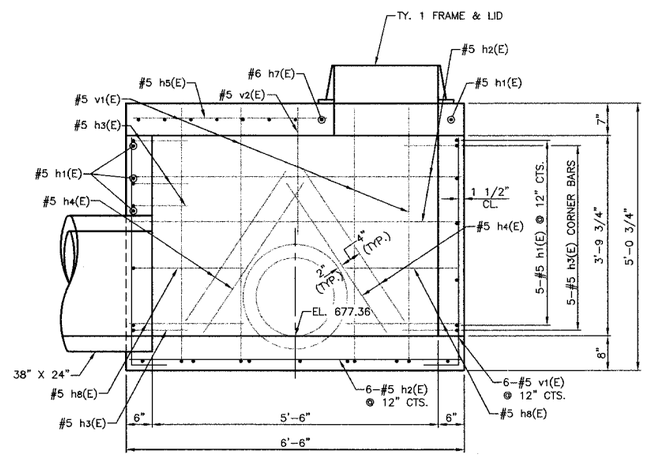

SECTION B-B

NOTES:

REINFORCEMENT BARS SHALL BE GRADE 60 AND SHALL BE EPOXY COATED.

CONCRETE SHALL BE CLASS SI.

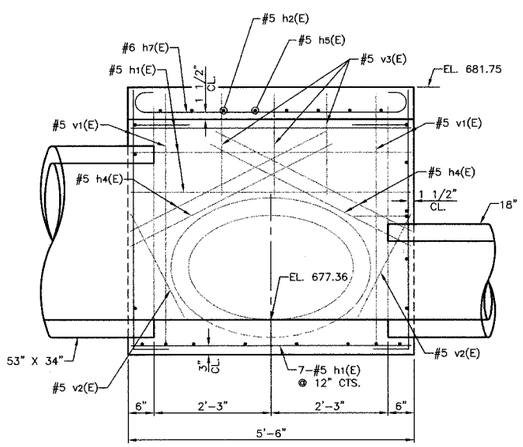

SECTION A-A

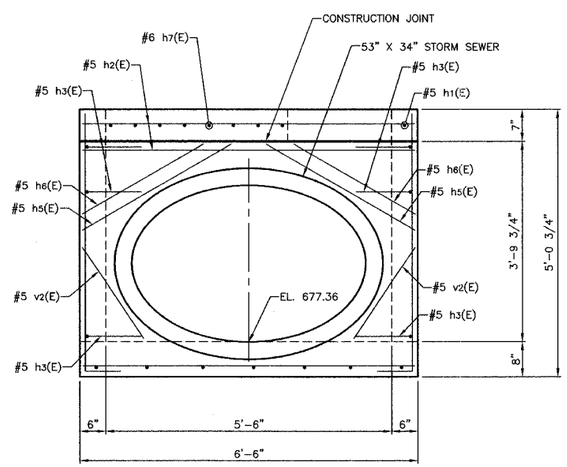

ELEVATION C-C

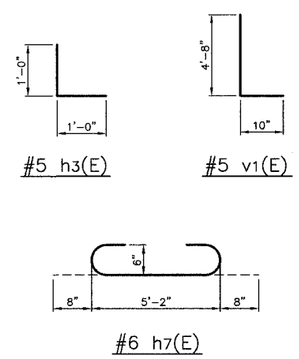

BILL OF REINFORCEMENT

BAR	NO.	SIZE	LENGTH	SHAPE
h1(E)	15	5	5'-2"	
h2(E)	16	5	6'-2"	
h3(E)	15	5	2'-0"	
h4(E)	10	5	4'-0"	
h5(E)	4	5	3'-9"	
h6(E)	2	5	2'-9"	
h7(E)	8	6	6'-6"	
h8(E)	4	5	2'-2"	
v1(E)	14	5	5'-6"	
v2(E)	7	5	2'-3"	
v3(E)	3	5	1'-9"	

REVISIONS	
NAME	DATE

VILLAGE OF BUFFALO GROVE

JUNCTION CHAMBER

DEERFIELD PARKWAY IMPROVEMENT

NOT TO SCALE

DATE: 6/2/2005
DESIGNED BY: OJH
TECHNICIAN: JRR
CHECKED BY: RTM

BID SET