Bench Mark: Brass disc on top of SE wingwall of Powder Mill Road Bridge over East Fork Wood River. Elev. 441.74

Existing Structure: S.N. 060-6400 built as F.A.U. Rte 9003, Sec. 03-00044-00-BR in 1960. The existing structure is a 3-span continuous wide flange with a 7" non-composite deck. The pile bent pier and abutments are founded on metal shell piles. The fixed pier is a single hammerhead pier on a steel H-pile supported footing. The structure was rehabilitated in 1989 with partial and full depth deck patching, a weatherproofing membrane and a bituminous overlay. The length of the structure is 203'-6" bk. to bk. of abutments and 33'-2" out to out of deck. Traffic to be maintained utilizing concrete barriers and traffic control devices.

FAU ROUTE	SECTION	COUNTY	TOTAL SHEETS	SHEET NO
9003	03-00044-00-BR	MADISON	24	8
STA.		TO STA.		
FED. ROAD DIST. NO. 7	ILLINOIS	FED. AID URBAN-		

SHEET NO. 1
17 SHEETS

CONTRACT NO. 97256

STATION 13+10.00
REBUILT 200 BY
VILLAGE OF EAST ALTON
F.A.U. RTE. 9003
SEC. 03-00044-00-BR
LOADING HS20
STRUCTURE NO. 060-6400

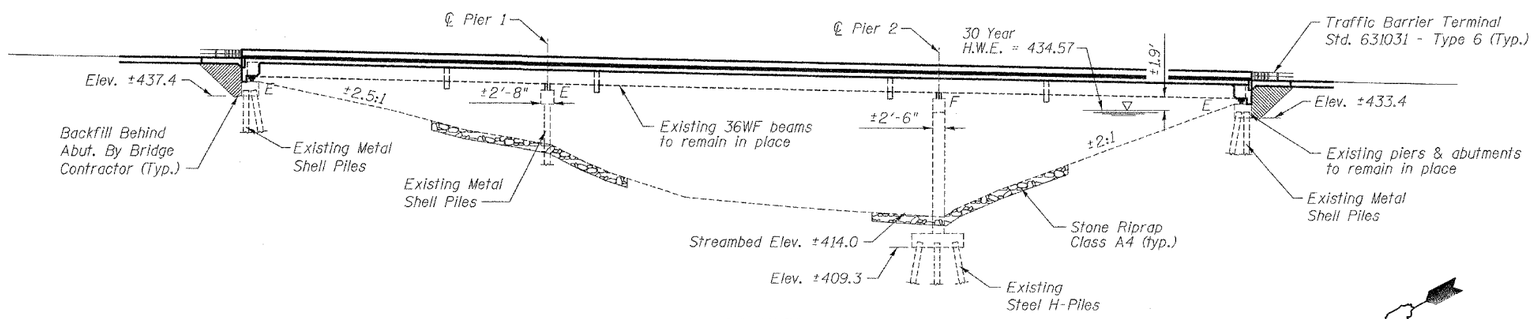

ELEVATION

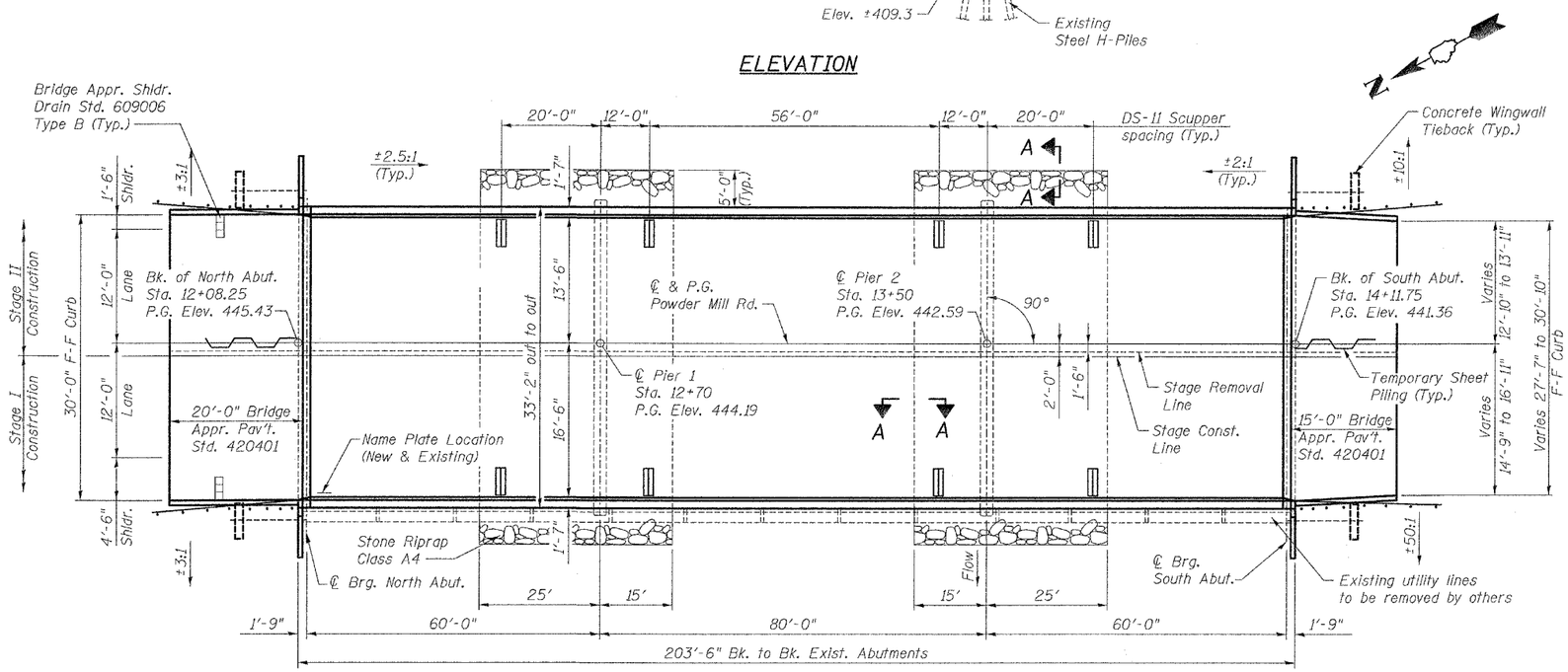

PLAN

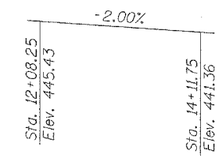

PROFILE GRADE

DESIGN SPECIFICATION

2002 AASHTO

LOADING HS20-44

Allow 50#/sq. ft. for future wearing surface.

DESIGN STRESSES

FIELD UNITS (Existing Construction)

fc = 1,200 psi (superstructure)
fc = 1,000 psi (substructure)
fs = 20,000 psi (reinf.)
fs = 18,000 psi (struct. steel)
n = 10

DESIGN STRESSES

FIELD UNITS (New Construction)

f'c = 3,500 psi
fy = 60,000 psi (reinf.)
fy = 36,000 psi (M270 Gr. 36) struct. steel

NAME PLATE

(See Std. 515001)

Note:
Existing name plates shall be cleaned and relocated next to the new name plates. Cost included with Name Plates.

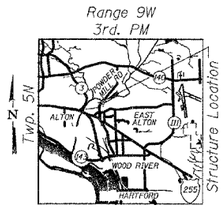

LOCATION SKETCH

"I certify that to the best of my knowledge, information and belief, this bridge design is structurally adequate for the design loading shown on the plans. The design is an economical one for the style of structure and complies with requirements of the current 'AASHTO Standard Specifications for Highway Bridges'."

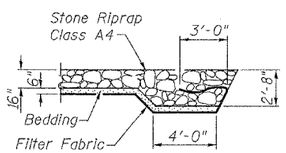

SECTION A-A

WATERWAY INFORMATION

Drainage Area = 66.2 mi² Low Grade Elev. 441.2 ft. @ W. Abutment
Max. Rec. HWE. = 438.2 (1993)

Flood	Freq. Yr.	Q C.F.S.	Opening Sq. Ft. Exist.	Opening Sq. Ft. Prop.	Natural H.W.E.	Head - Ft. Exist.	Head - Ft. Prop.	Headwater El. Exist.	Headwater El. Prop.
Overtopping	-	-	-	-	-	-	-	-	-
Design	30	7900	1956	1956	434.57	0.0	0.0	434.57	434.57
Base	100	15200	2464	2464	437.68	0.0	0.0	437.68	437.68
Max. Calc.	500	19700	2696	2696	442.23	0.71	0.71	442.94	442.94

Plans Prepared By:
Oates Associates, Inc.

LICENSED STRUCTURAL ENGINEER
BRUCE P. SCHOPP
081-005158
COLLINSVILLE, ILLINOIS
STATE OF ILLINOIS

6/21/05

EXPIRES 11/30/06

GENERAL PLAN
POWDER MILL ROAD OVER
EAST FORK OF WOOD RIVER
SECTION 03-00044-00-BR
VILLAGE OF EAST ALTON
STA. 13+10
STRUCTURE NO. 060-6400