INSPECTION HOLES AND UNDERDRAIN REMOVAL

EXISTING UNDERDRAINS THAT ARE LOCATED IN THE PROPOSED PAVEMENT SECTION OR THE 16" SOIL PROCESSING AREA WILL BE REMOVED.

EXISTING UNDERDRAINS THAT ARE LOCATED BENEATH THE 16" SOIL PROCESS AREA WILL BE EXCAVATED.

HOLES THAT REMAIN FROM REMOVING UNDERDRAIN PIPE AT MANHOLES OR PIPE SECTIONS WILL BE REPAIRED. THE REPAIR WILL RESTORE REINFORCING AND FULL WALL THICKNESS WITH AR610 STRUCTURAL CONCRETE.

ALONG THE LINE OF UNDERDRAIN REMOVAL, INSPECTION HOLES WILL BE REMOVED TO A DEPTH BENEATH THE SOIL PROCESS ELEVATION.

WHERE THE UNDERDRAIN PIPE IS EXCAVATED, P.E. TUBING OR BROKEN CLAY PIPE WILL NOT BE PERMITTED IN THE FILL USED FOR EMBANKMENTS.

WHERE THE UNDERDRAIN PIPE IS EXCAVATED BELOW THE SOIL PROCESSING DEPTH, THE EXCAVATION WILL BE BACKFILLED WITH A GRANULAR MATERIAL COMPLYING TO AR209 SPECIFICATIONS. LOOSE EARTH MATERIAL WILL BE REMOVED FROM THE EXCAVATION PRIOR TO PLACING THE AR209 GRANULAR MATERIAL.

THE REMOVED INSPECTION HOLES AND PIPE MATERIAL WILL BE DISPOSED OFF AIRPORT SITE BY CONTRACTOR.

PAYMENT FOR THE UNDERDRAIN EXCAVATION WILL BE MADE UNDER ITEM: AR705900 "REMOVE UNDERDRAIN" PER LINEAR FOOT. THE PRICE WILL INCLUDE REMOVAL OF INSPECTION HOLES, EXCAVATING AND REMOVING PIPE, BACKFILLING, COMPACTING AND MAKING REPAIRS TO MANHOLES OR PIPE STRUCTURES WHERE UNDERDRAIN PIPE IS REMOVED.

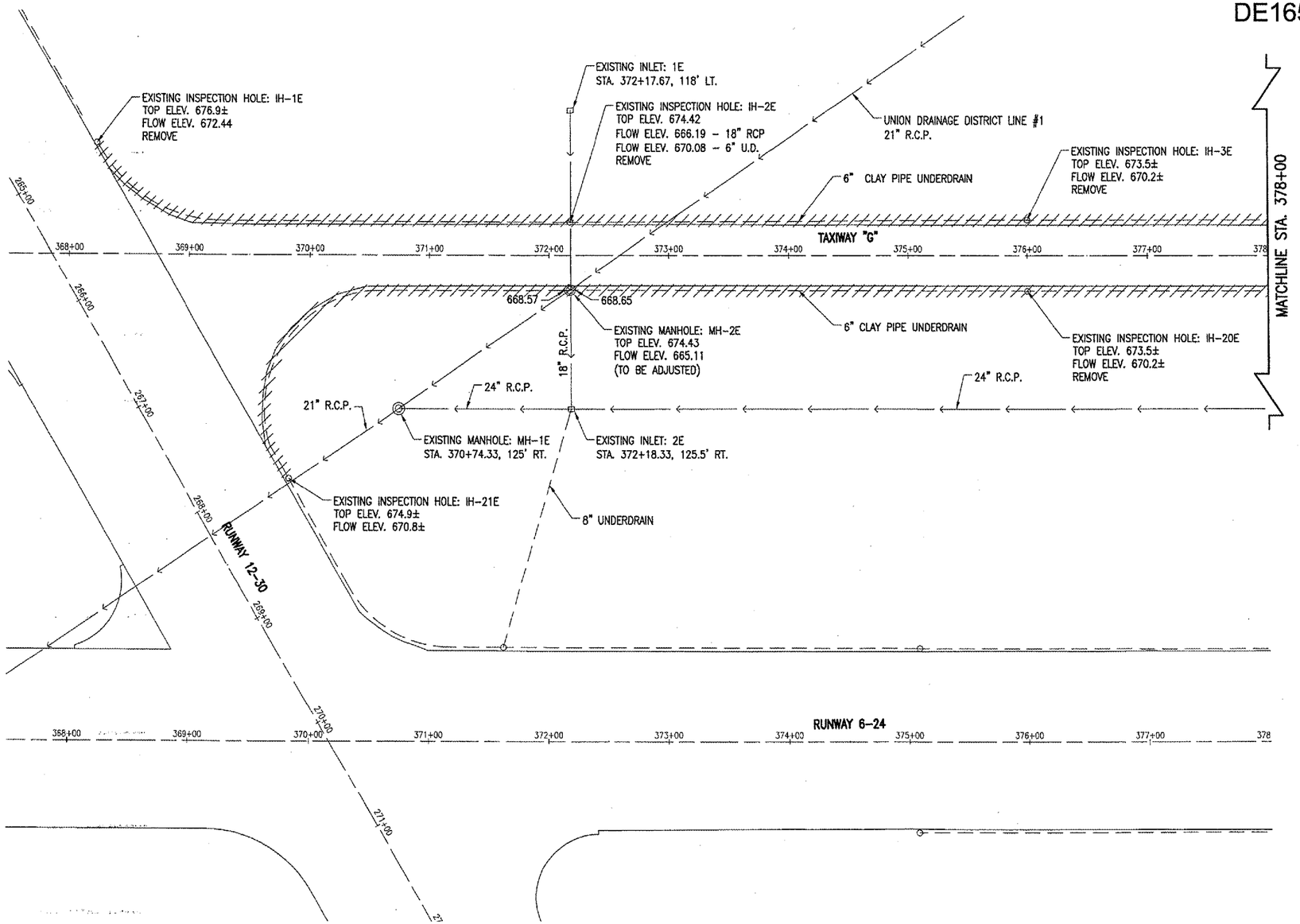

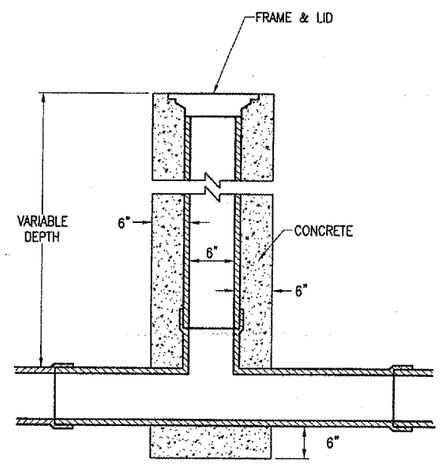

EXISTING INSPECTION HOLE-TYPE A

NOT TO SCALE

LEGEND

- EXISTING PAVEMENT
- EXISTING STORM SEWER
- EXISTING UNDERDRAIN
- EXISTING UNDERDRAIN EXCAVATED
- EXISTING INLET
- EXISTING MANHOLE
- EXISTING INSPECTION HOLE
- EXISTING HEADWALL

0' 25' 50' 100'

FULL SIZE SCALE: 1"= 50'
HALF SIZE SCALE: 1"= 100'

DATE	REVISION	BY

DECATUR AIRPORT

DECATUR, ILLINOIS

IL. PROJ.: DEC-3414 A.I.P. PROJ.: 3-17-0033-28

H.E. Project No. 802-04TXYD
Filename R-131DRN.DWG
Scale 1"=50'
Date 03/18/05

LAYOUT	CCC	03/18/05
DRAWN	CCC	03/18/05
REVIEWED	WJM	06/07/05

HANSON

Engineers, Architects, Scientists
1525 South Sixth Street
Springfield, Illinois 62703-2886
Offices Nationwide

TAXIWAY G WIDENING PHASE II

EXISTING UNDERDRAIN REMOVAL PLAN
STA. 367+86.06 TO STA. 378+00

JUN 10, 2005 9:22 AM CCC
I:\AIRPORTS\DECATUR\802-04TXYD\AIRPORT\SHEETS\CONTRACT-1\R-131DRN.DWG - 367+86.06 TO 378