STATE OF ILLINOIS
DEPARTMENT OF TRANSPORTATION

* Order $a_7(E)$, $a_8(E)$, $b_5(E)$, $b_6(E)$ bars full length. Cut to fit skew and use remainder of bars in opposite side.

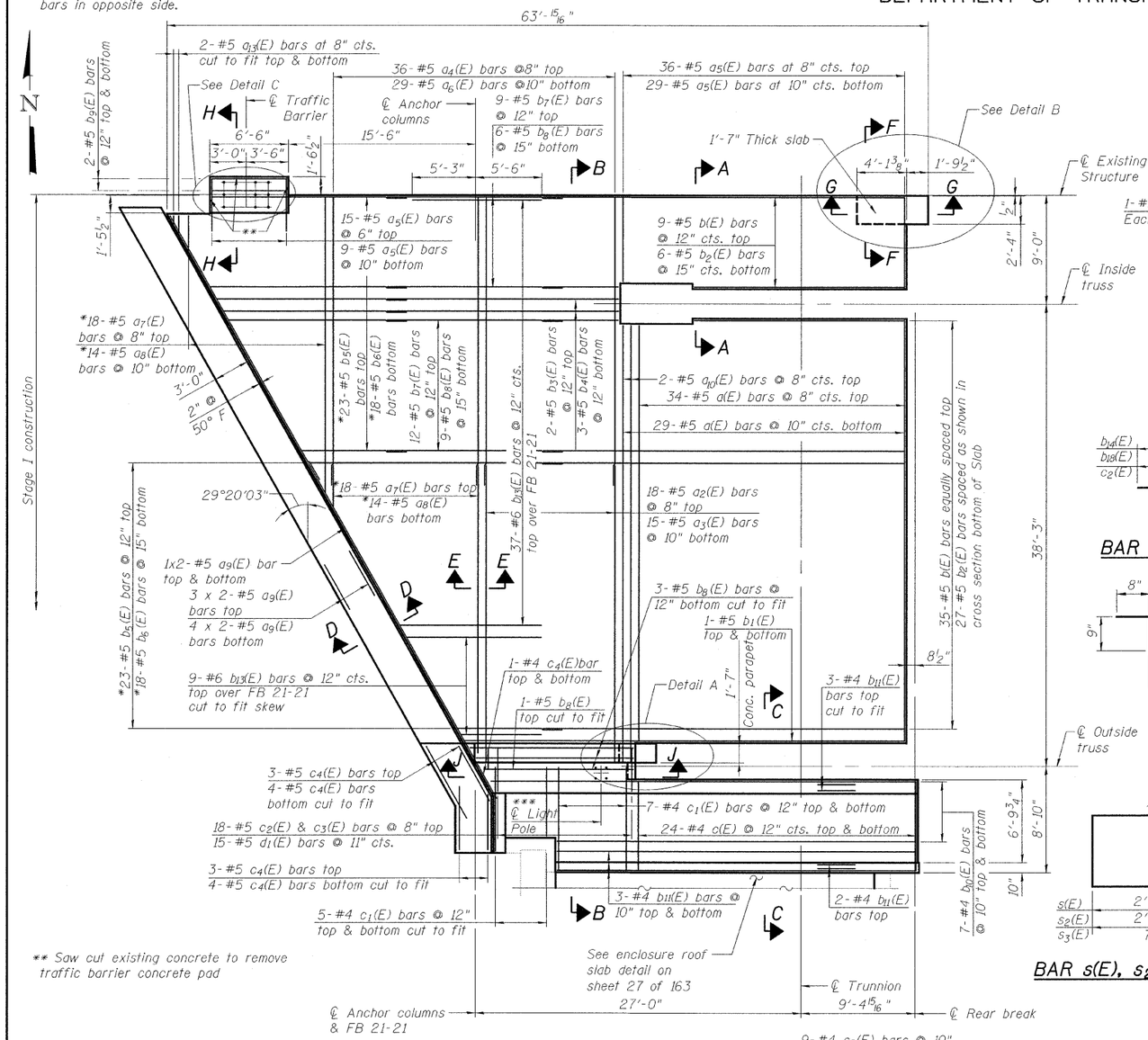

** Saw cut existing concrete to remove traffic barrier concrete pad

PLAN

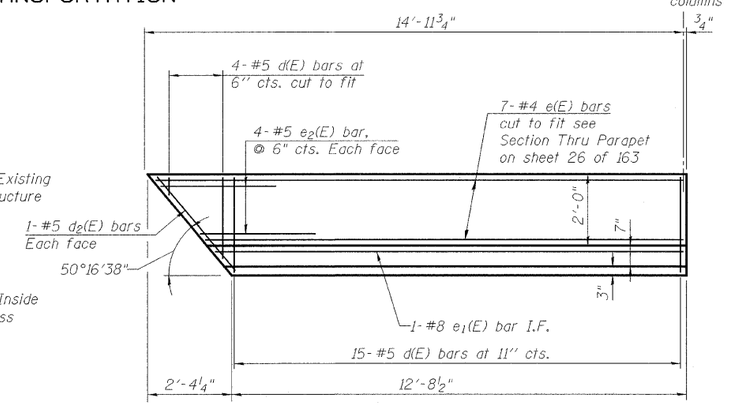

INSIDE ELEVATION OF PARAPET

(Looking South at Southwest parapet)

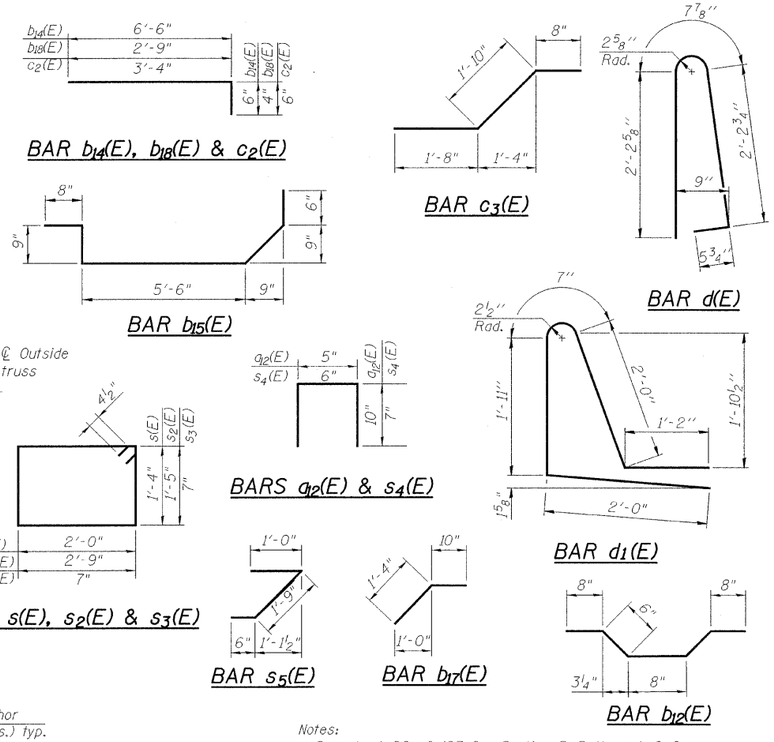

SOUTHWEST FIXED SPANS BILL OF MATERIAL

Bar	No.	Size	Length	Shape
a(E)	63	#5	34'-10"	
a2(E)	18	#5	24'-6"	
a3(E)	15	#5	26'-5"	
a4(E)	36	#5	23'-10"	
a5(E)	89	#5	7'-6"	
a6(E)	29	#5	22'-10"	
a7(E)	18	#5	25'-9"	
a8(E)	14	#5	27'-5"	
a9(E)	18	#5	26'-3"	
a10(E)	2	#5	36'-5"	
a12(E)	93	#5	2'-1"	
a13(E)	4	#5	2'-0"	
b(E)	44	#5	30'-0"	
b1(E)	2	#5	35'-11"	
b2(E)	33	#5	35'-0"	
b3(E)	2	#5	19'-3"	
b4(E)	3	#5	23'-8"	
b5(E)	23	#5	28'-8"	
b6(E)	18	#5	18'-3"	
b7(E)	21	#5	14'-7"	
b8(E)	19	#5	14'-0"	
b9(E)	27	#5	6'-3"	
b10(E)	14	#4	34'-11"	
b11(E)	11	#4	30'-7"	
b12(E)	7	#4	3'-0"	
b13(E)	46	#6	10'-9"	
b14(E)	4	#5	7'-0"	
b15(E)	4	#5	8'-6"	
b17(E)	188	#5	2'-2"	
b18(E)	124	#5	3'-1"	
c(E)	48	#4	7'-1"	
c1(E)	24	#4	10'-2"	
c2(E)	18	#5	3'-10"	
c3(E)	18	#5	4'-2"	
c4(E)	15	#5	7'-6"	
d(E)	19	#5	5'-7"	
d1(E)	15	#5	7'-8"	
d2(E)	2	#5	3'-4"	
e(E)	7	#4	14'-8"	
e1(E)	1	#8	13'-0"	
e2(E)	8	#5	6'-0"	
s(E)	9	#4	7'-5"	
s1(E)	4	#4	6'-3"	
s2(E)	4	#4	9'-1"	
s3(E)	32	#4	3'-1"	
s4(E)	48	#4	1'-8"	
s5(E)	7	#4	3'-9"	
Reinforcement Bars, Epoxy Coated			Pound	15150
Concrete Superstructure			Cu. Yd.	72.5
Latex Bridge Deck Concrete Overlay, 2 1/4"			Sq. Yd.	243.5
Bridge Deck Grooving			Sq. Yd.	232.4
Protective Coat			Sq. Yd.	307

Bars indicated thus 1 x 2 - #5 etc. indicates 1 line of bars with 2 lengths per line.

MINUMUM BAR LAP

(Slab)

#5 bar = 1'-8"

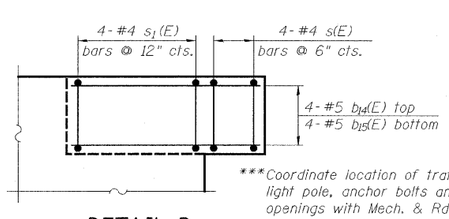

DETAIL B

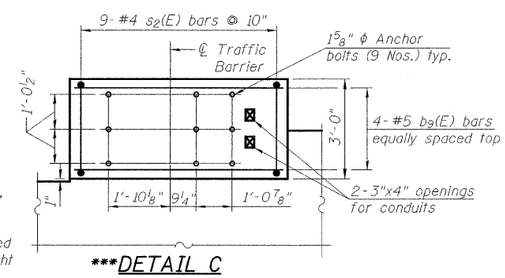

***DETAIL C

(Place reinforcement to miss anchor bolts & openings)

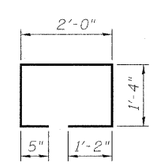

BAR s1(E)

***Coordinate location of traffic barrier, light pole, anchor bolts and conduit openings with Mech. & Rdwy. lighting dwgs. Cost of anchor bolts is included in the cost of traffic barrier and light pole.

Notes:
See sheet 20 of 163 for Section B-B through G-G.
See sheet 21 of 163 for Section A-A.
See sheet 29 of 163 for Detail A.
Dimensions are based on a Rolled Rail Strip Seal Joint. If the Contractor elects to use the Welded Rail Strip Seal Joint, deck dimensions may require adjustments to satisfy the details on Sheet 32 of 163.

SUPERSTRUCTURE
SOUTHWEST FIXED SPANS
STRUCTURE NO. 016-2445

DESIGNED	M. SHAIKH
CHECKED	J. GRAINAWI
DRAWN	D. C. PATEL
CHECKED	A. HAMMAD

PB Americas, Inc.
230 WEST MONROE STREET, SUITE 900
CHICAGO, IL. 60606

SHEET NO. 19
163 SHEETS

F.A.P RTE.	SECTION	COUNTY	TOTAL SHEETS	SHEET NO.
389	2424.2B-R	COOK	398	100
		CONTRACT NO. 60D61		
FED. ROAD DIST. NO. 7	ILLINOIS	FED. AID PROJECT		

6-05-09

T:\16843A\Structural\Cadd\Pre-final\EB_Plans\0162445-60D61-019-SUP.dgn
05-JUN-2009 10:01