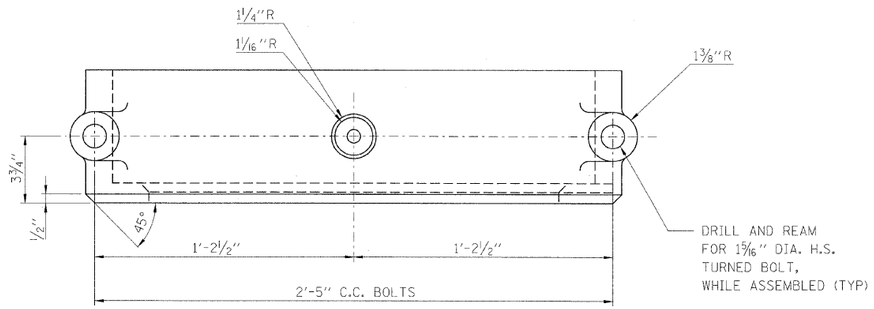

PLAN

SCALE: 3"=1'-0"

MATERIAL: ASTM A732 GRADE 5N OR 13Q

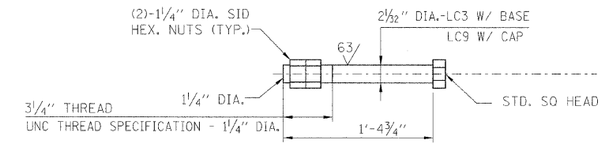

THRUST COLLAR BOLT

32 REQ'D-1 15/16" DIA.x1'-4" LG.

SCALE: 1½"=1'-0"

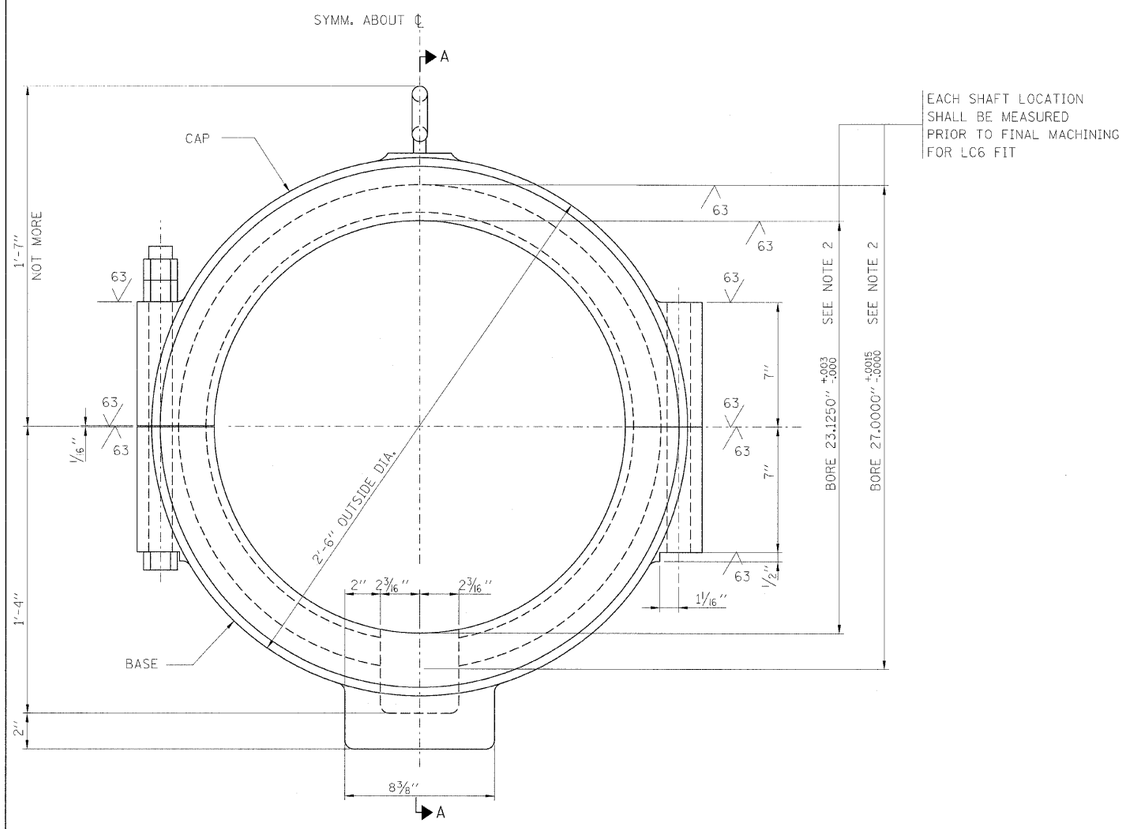

ELEVATION

SCALE: 3"=1'-0"

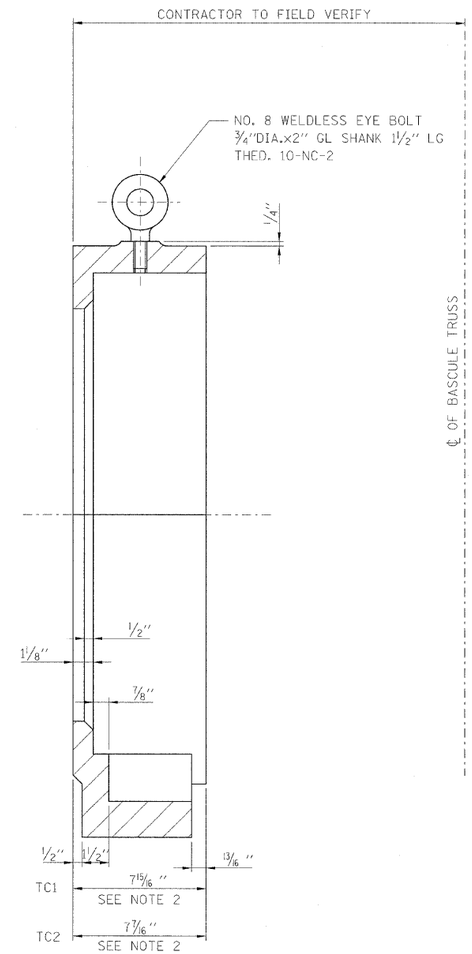

SECTION A-A

SCALE: 3"=1'-0"

NOTES:

1. FOR GENERAL NOTES, SEE SHEET M-01.
2. DIMENSIONS AND TOLERANCES SHOWN ARE FROM AS-BUILT DRAWINGS. CONTRACTOR SHALL VERIFY DIMENSIONS AND TOLERACES AT EACH LOCATION PRIOR TO FINAL MACHINING.

PB Americas, Inc. 230 WEST MONROE STREET, SUITE 900 CHICAGO, IL. 60606	USER NAME = sharma	DESIGNED - D. NYARKO	REVISED -	**STATE OF ILLINOIS DEPARTMENT OF TRANSPORTATION**	**NEW TRUNNION THRUST COLLAR DETAILS**	F.A.P RTE.	SECTION	COUNTY	TOTAL SHEETS / SHEET NO.
	FILE NAME = D160d61-sht-mac-22.dgn	DRAWN - J. FERRERI	REVISED -			389	2424-2B-R	COOK	398 / 266
	PLOT SCALE = NONE	CHECKED - D. NYARKO	REVISED -					CONTRACT NO. 60D61	
	PLOT DATE = 5/7/2009	DATE - MAY 8, 2009	REVISED -		SCALE: AS SHOWN / SHEET NO. M-22 OF M-27 SHEETS / STA. 379+06.09 TO STA. 382+45.28	FED. ROAD DIST. NO. 1	ILLINOIS	FED. AID PROJECT	