NOTES:

1. FOR DRAWING SYMBOLS, LEGEND AND ABBREVIATIONS SEE DRAWINGS E-04, E-05 AND E-05.

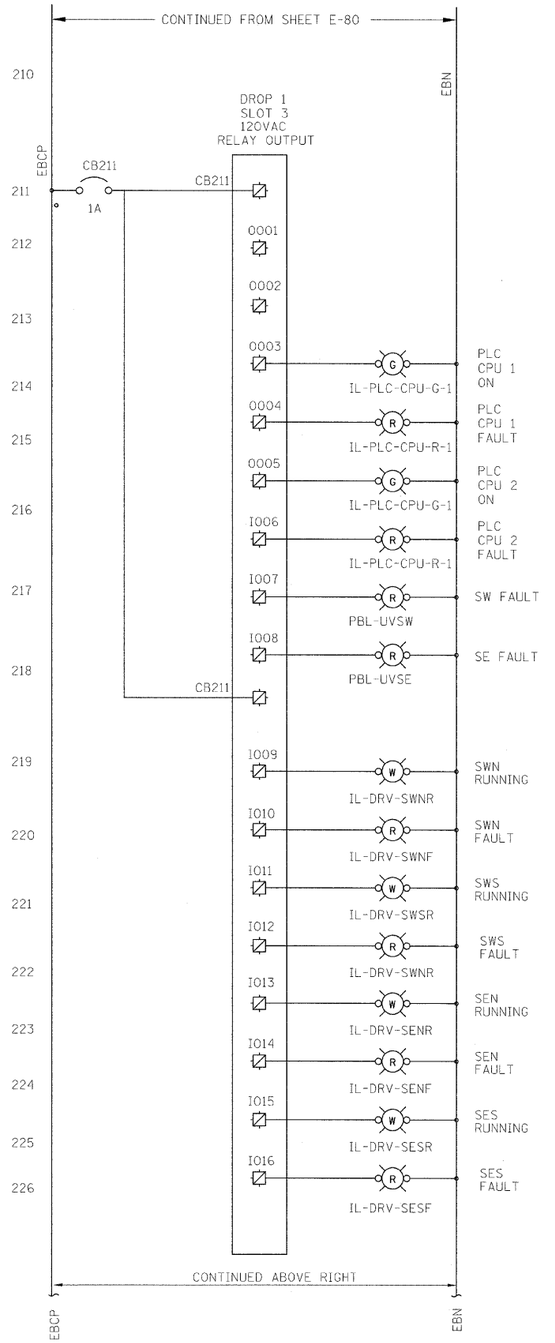

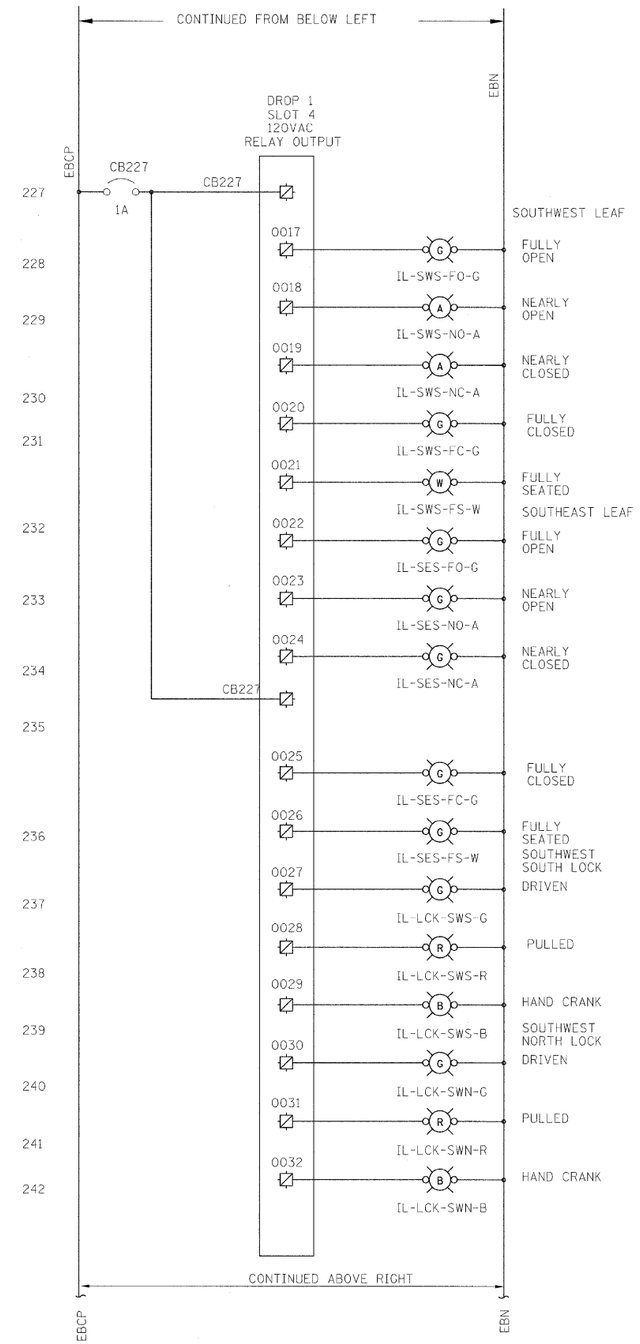

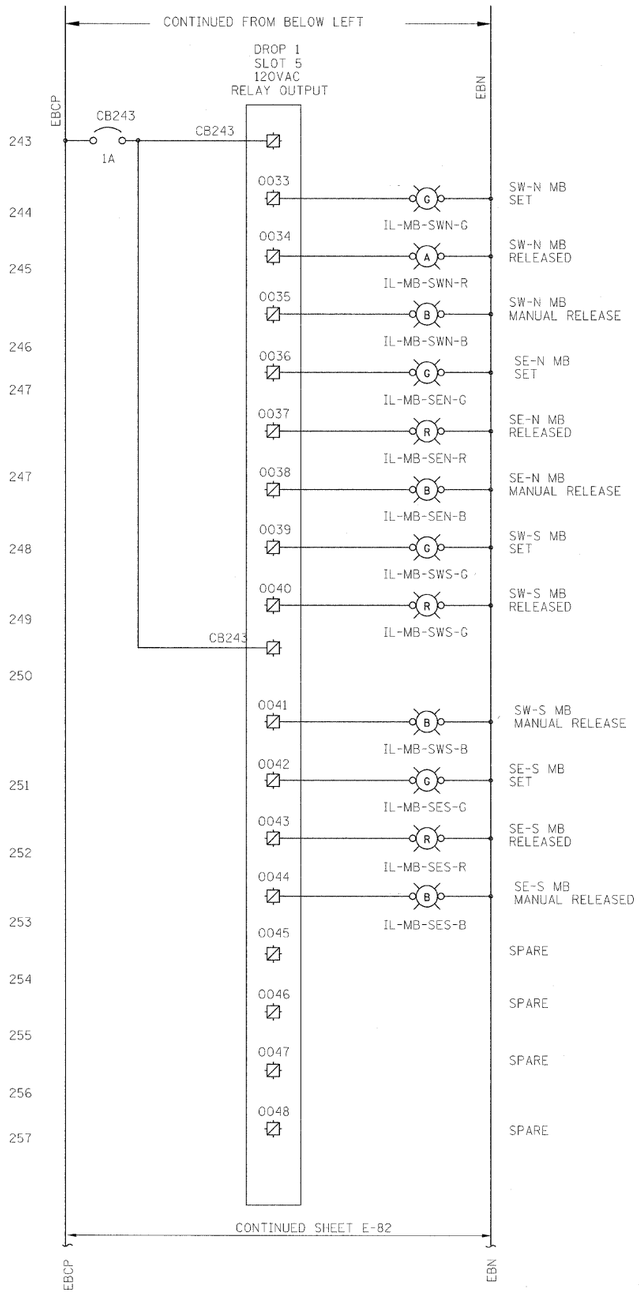

EASTBOUND CONTROL DESK

PB Americas, Inc. 230 WEST MONROE STREET, SUITE 900 CHICAGO, IL. 60606	USER NAME = sharma	DESIGNED - B. CROUTHAMEL	REVISED -	**STATE OF ILLINOIS DEPARTMENT OF TRANSPORTATION**	**BRIDGE CONTROL SCHEMATIC DIAGRAM EASTBOUND – SHEET 2**
	FILE NAME = D160d61-sht-elc-81.dgn	DRAWN - S. SHARMA	REVISED -		
	PLOT SCALE = NONE	CHECKED - S. STERN	REVISED -		
	PLOT DATE = 5/7/2009	DATE - MAY 8, 2009	REVISED -		SCALE: AS SHOWN · SHEET NO. E-81 OF E-125 SHEETS · STA. 379+06.09 TO STA. 382+45.28

F.A.P RTE.	SECTION	COUNTY	TOTAL SHEETS	SHEET NO.
389	2424-28-R	COOK	398	352
		CONTRACT NO. 60D61		
FED. ROAD DIST. NO. 1	ILLINOIS	FED. AID PROJECT		