# (4) EXISTING TYPICAL CROSS SECTION
## F.A.P. 693 (IL 9)

STATION (3) 237+07.68 TO STATION 243+83.32 (5)

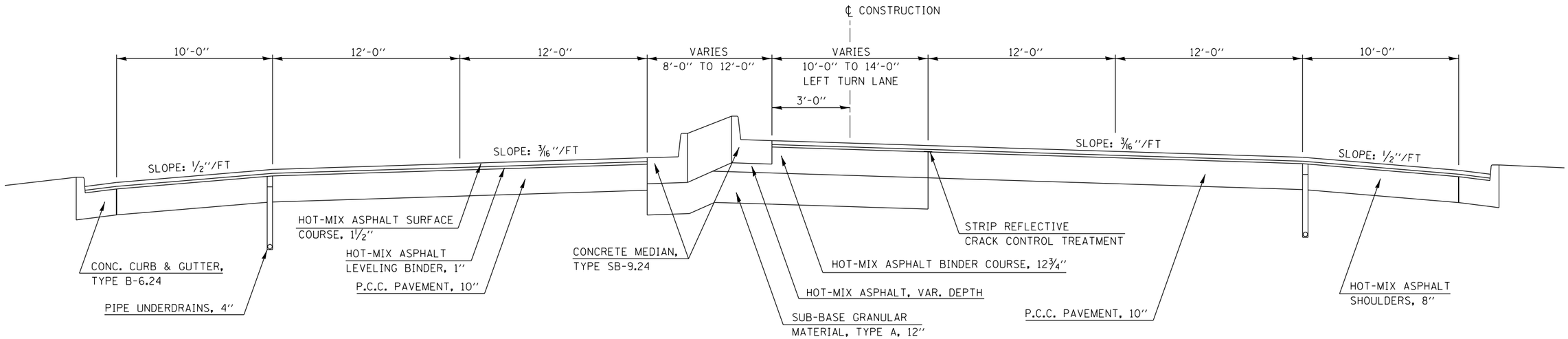


# (4) PROPOSED TYPICAL CROSS SECTION
## F.A.P. 693 (IL 9)

STATION (3) 237+07.68 TO STATION 243+83.32 (5)

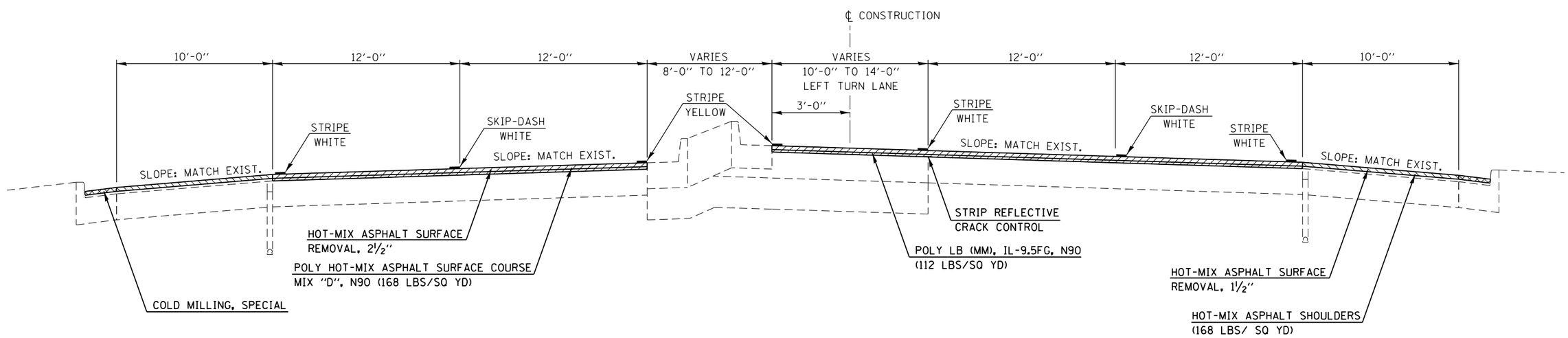


| | | | | | | | | | | | |
|---|---|---|---|---|---|---|---|---|---|---|---|
| FILE NAME = c:\pw_work\pwidot\piersonbr\d0181149\D570787-sht-typical.dgn | USER NAME = piersonbr | DESIGNED - | REVISED - | STATE OF ILLINOIS DEPARTMENT OF TRANSPORTATION | TYPICAL CROSS SECTIONS | F.A.P. RTE. | SECTION | COUNTY | TOTAL SHEETS | SHEET NO. |
| | PLOT SCALE = 40.0000 ' / in. | CHECKED - | REVISED - | | | 693 | (FR)RS-1 | MCLEAN | 48 | 13 |
| $MODELNAME$ | PLOT DATE = 6/13/2014 | DATE - | REVISED - | | SCALE: SHEET 4 OF 10 SHEETS STA. TO STA. | | | CONTRACT NO. 70787 | | |
| | | | | | | | ILLINOIS | FED. AID PROJECT | | |