F.A.I. RTE.	SECTION	COUNTY	TOTAL SHEETS	SHEET NO.
94	2005-069 LS	COOK	60	41
STA. 2254+81 (NB I-94) 1255+15 (SB I-94)	TO STA. 2263+45 (NB I-94) 1263+40 (SB I-94)			
FED. ROAD DIST. NO.	ILLINOIS	FED. AID PROJECT		

60A75

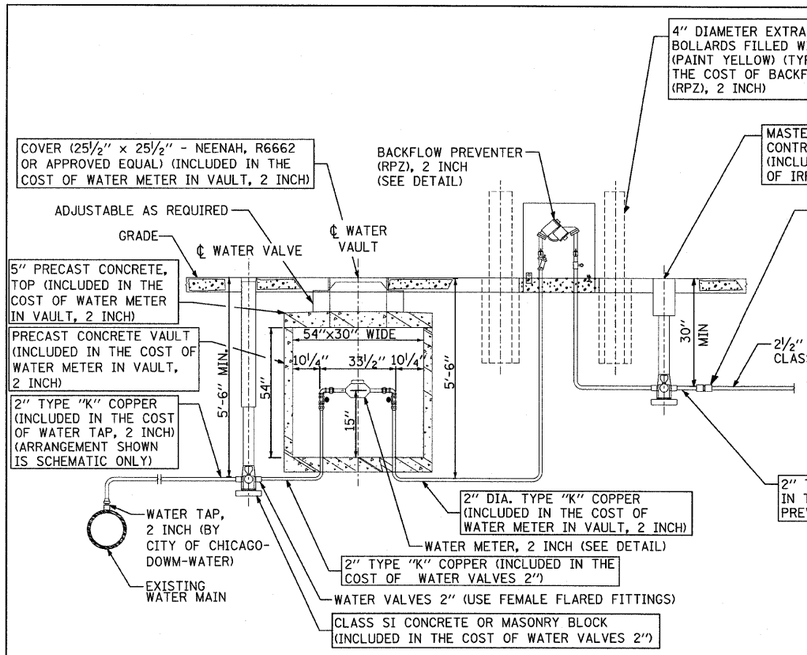

TYPICAL METER INSTALLATION FOR 2" WATER SERVICE WITH BACK FLOW PREVENTER (RPZ), 2 INCH

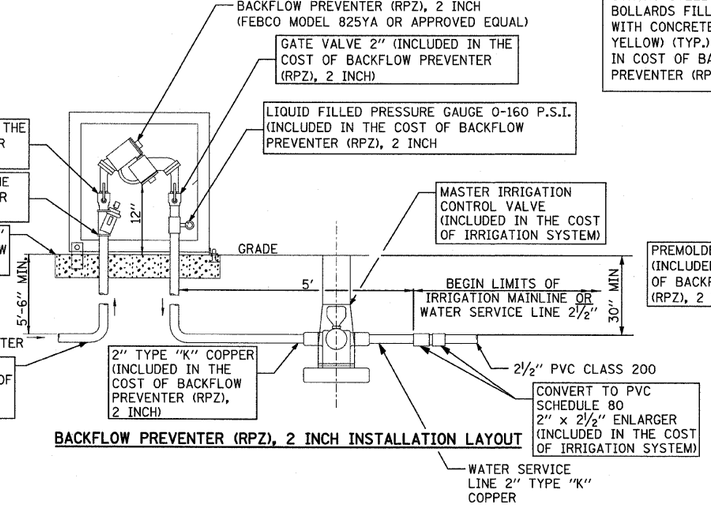

BACKFLOW PREVENTER (RPZ), 2 INCH INSTALLATION LAYOUT

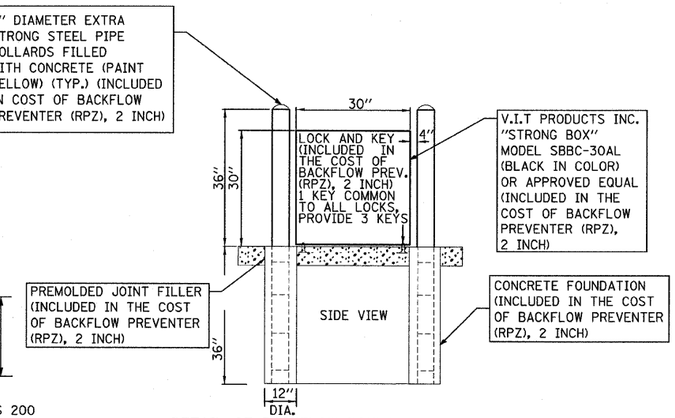

DETAIL OF BACKFLOW PREVENTER (RPZ), 2 INCH ENCLOSURE AND BOLLARDS

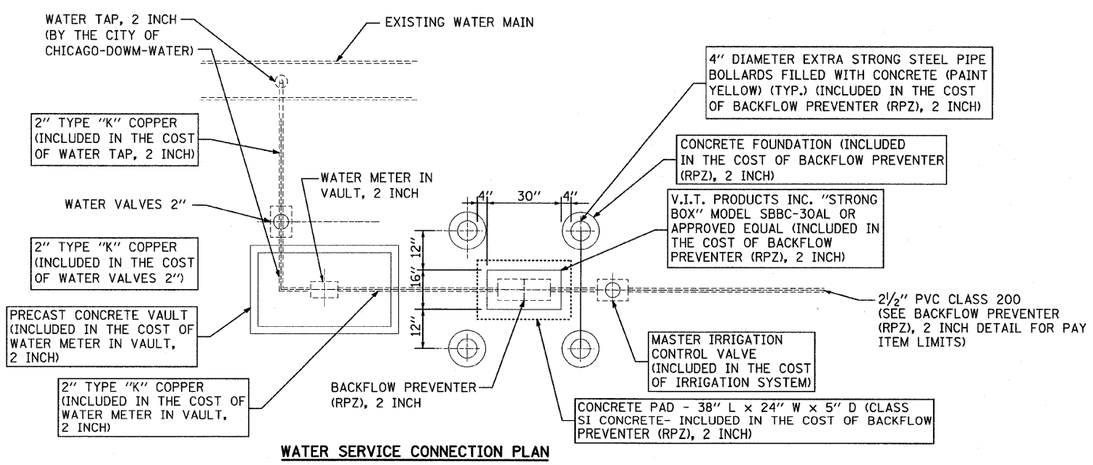

WATER SERVICE CONNECTION PLAN (TYPICAL EQUIPMENT LAYOUT PLAN)

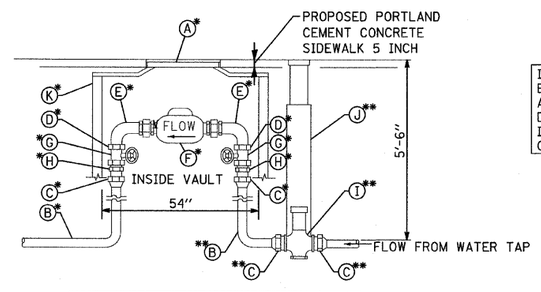

A	FRAME AND LID (NEENAH R6662)
B	2" TYPE "K" COPPER PIPE
C	FEMALE FLARED FITTING
D	BRASS BUSHING
E	BENT METER COUPLING
F	METER
G	FULL PORT CONTROL VALVE
H	MALE I.P.S. TO FLARED ADAPTER
I	ROUNDWAY
J	WATER VALVE ASSEMBLY
K	PRECAST CONCRETE VAULT

*- ITEMS ARE INCLUDED IN THE COST OF WATER METER IN VAULT, 2 INCH
**-ITEMS ARE INCLUDED IN THE COST OF WATER VALVES 2"

NEW COPPER 2" WATER SERVICE STANDARD METER VAULT

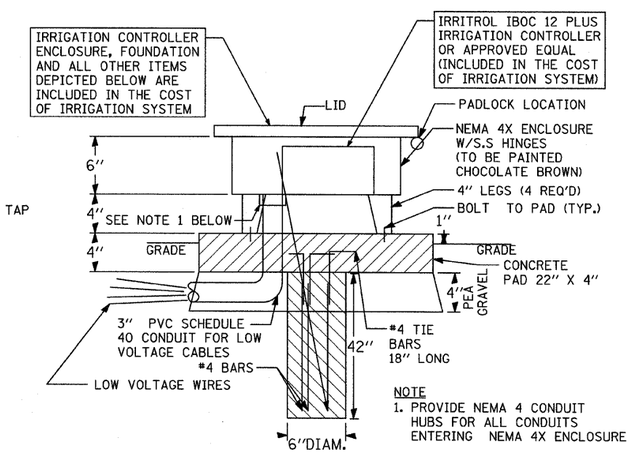

NOTE
1. PROVIDE NEMA 4 CONDUIT HUBS FOR ALL CONDUITS ENTERING NEMA 4X ENCLOSURE

IRRIGATION CONTROLLER NEMA 4X ENCLOSURE - DETAIL
N.T.S.

TYLIN INTERNATIONAL

REVISIONS	
NAME	DATE

ILLINOIS DEPARTMENT OF TRANSPORTATION

F.A.I. 94 (DAN RYAN EXPRESSWAY)

GATEWAY AND CORNER GARDEN WATER SERVICE EQUIPMENT INSTALLATION, PAVEMENT REMOVAL AND REPLACEMENT DETAILS
SHEET 1 OF 2

SCALE: N.T.S. DRAWN BY: JDF
DATE: JUNE 20, 2008 CHECKED BY: JPM

6/23/2008 9:40:13 AM