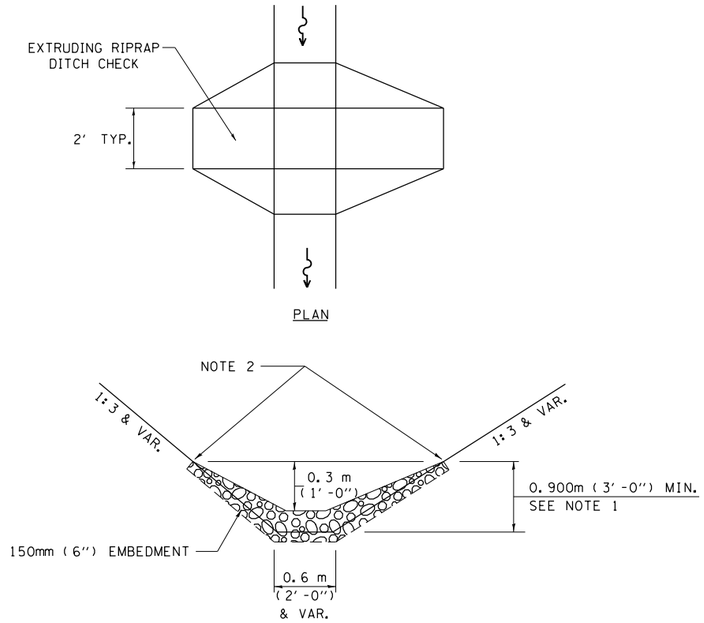

OPTION 1

(EXTRUDING DITCH CHECK)
RECOMMENDED FOR AREAS
W/ RIPRAP DITCH LINING

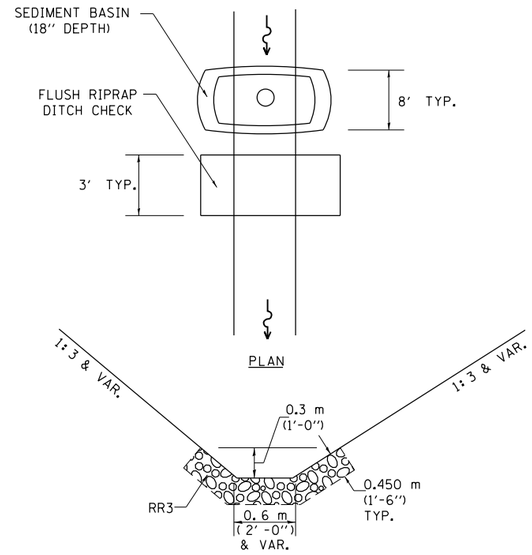

OPTION 2

(FLUSH DITCH CHECK)
RECOMMENDED FOR AREAS
W/O RIPRAP DITCH LINING

STONE DUMPED RIPRAP DITCH CHECK

OPTIONS 1 & 2 OR
AS DIRECTED BY THE ENGINEER

NOTE 1: RIPRAP SHALL EXTEND FAR ENOUGH UP THE SLOPES TO ALLOW 0.3m (1') OVERTOPPING TO AVOID ERODING AROUND THE EDGES OF THE RIPRAP.

NOTE 2: ENDS SHALL BE TIED INTO SLOPES.

LEGEND FOR STORM WATER POLLUTION PREVENTION PLAN

ITEM	SYMBOL
AGGREGATE DITCH CHECK	
TEMPORARY DITCH CHECK	
INLET PIPE PROTECTION	
PERIMETER EROSION BARRIER	
SEDIMENT BASINS EARTH EXCAVATION FOR EROSION CONTROL AGGREGATE (EROSION CONTROL)	
PRESERVE EXISTING TREES, WOODLANDS, AND UNDERSTORY (OUTSIDE CONSTRUCTION LIMITS)	
ITEM PLACED AT BEGINNING OF CONSTRUCTION (Requirement)	* ITEM *
ITEM PLACED AS DIRECTED BY ENGINEER (When required by situation)	ITEM
DIRECTION OF OVERLAND FLOW	
DIRECTION OF CHANNEL/DITCH FLOW	

GENERAL NOTES:
All items shall be constructed as shown on this sheet, on Standard 280001, and as directed by the Engineer.

FILE NAME = I:\0807404-IL104 Over Brower Creek\CADData\CADsheets\CADsheets_JMC\D672B61-shtJ-SWPPP.dgn	USER NAME = jleaf	DESIGNED -	REVISED -	STATE OF ILLINOIS DEPARTMENT OF TRANSPORTATION	STORM WATER POLLUTION PREVENTION PLAN	F.A.P. RTE.	SECTION	COUNTY	TOTAL SHEETS	SHEET NO.
		DRAWN -	REVISED -			745	108B-3	PIKE	69	32
	PLOT SCALE = 40.0000 ' / in.	CHECKED -	REVISED -					CONTRACT NO. 72B61		
	PLOT DATE = 6/10/2014	DATE -	REVISED -		SCALE: SHEET NO. OF SHEETS STA. TO STA.	FED. ROAD DIST. NO. 6	ILLINOIS	FED. AID PROJECT		