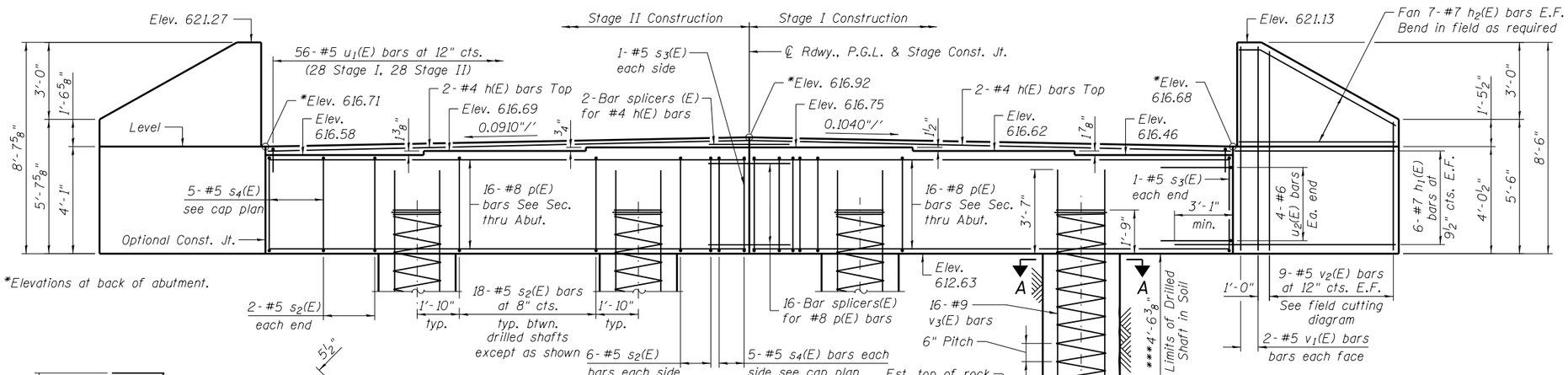

ELEVATION
(Looking West)

**#5 sp(E) spiral Ea. shaft
Provide 1½ extra turns top & bott. Shop weld together extra spiral turn top & bott. per AWS D1.4
Provide min. 4-#4 spacers or equivalent.

**Allowable substitution:
Provide 1½ extra turns top & bott. with 135° standard hook into core at end of spiral.
***Splicing of reinforcement will not be allowed in this region.

Notes:
Pour steps monolithicaly with cap.
Space cap reinforcement to miss anchor bolts.
Minimum lap for spirals = 1½ turns.

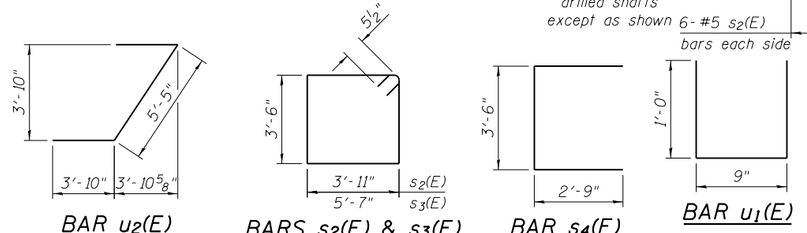

BAR u2(E)

BARS s2(E) & s3(E)

BAR s4(E)

BAR u1(E)

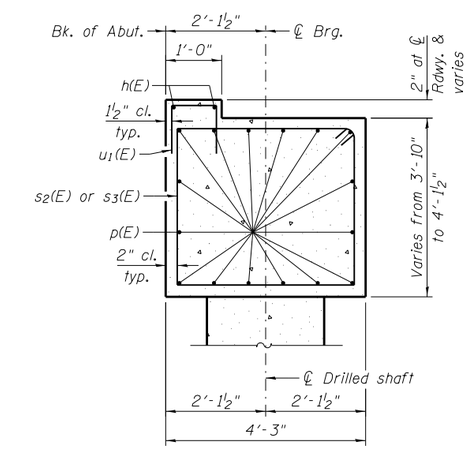

SECTION THRU ABUT.
(at Rt. L's)

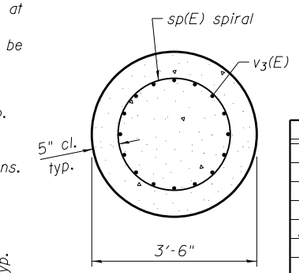

SECTION A-A

W. ABUTMENT BILL OF MATERIAL

Bar	No.	Size	Length	Shape
h(E)	4	#4	27'-5"	
h1(E)	24	#7	13'-6"	
h2(E)	28	#7	9'-6"	
p(E)	32	#8	27'-5"	
s2(E)	52	#5	15'-9"	
s3(E)	4	#5	19'-1"	
s4(E)	20	#5	9'-0"	
⊛ sp(E)	4	#5	15'-4"	
u1(E)	56	#5	2'-9"	
u2(E)	8	#6	13'-1"	
v1(E)	8	#5	8'-3"	
v2(E)	18	#5	13'-1"	
v3(E)	64	#9	17'-2"	
Structure Excavation			Cu. Yd.	177
Concrete Structures			Cu. Yd.	40.3
Reinforcement Bars, Epoxy Coated			Pound	9180
Drilled Shaft in Soil			Cu. Yd.	6.5
Drilled Shaft in Rock			Cu. Yd.	9.5

For details of Bar Splicers, see sheet 17 of 19.
⊛ Length is height of spiral.

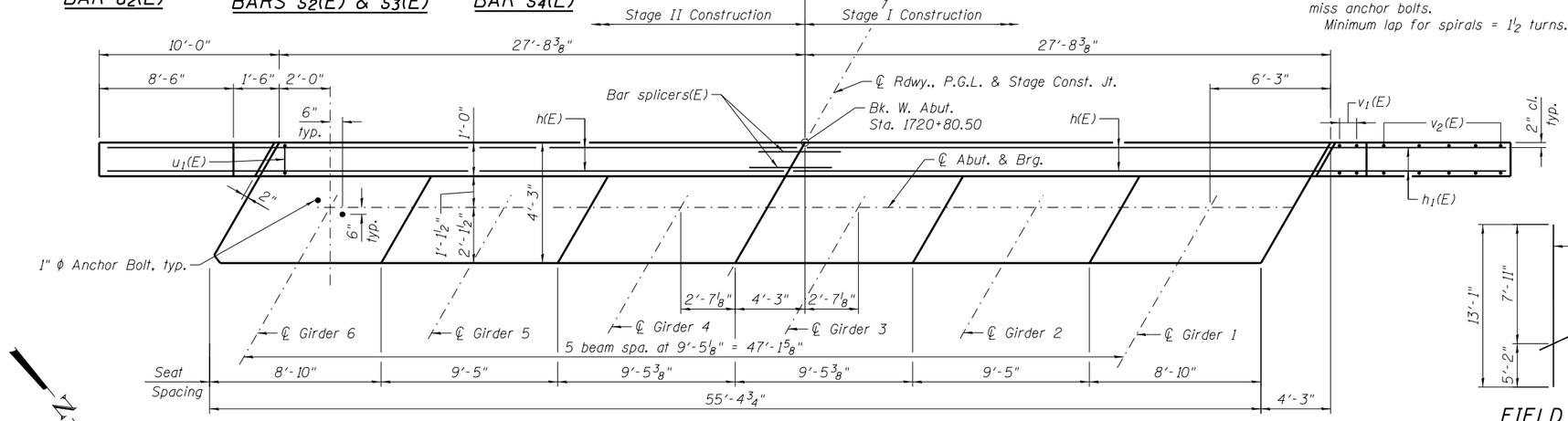

PLAN

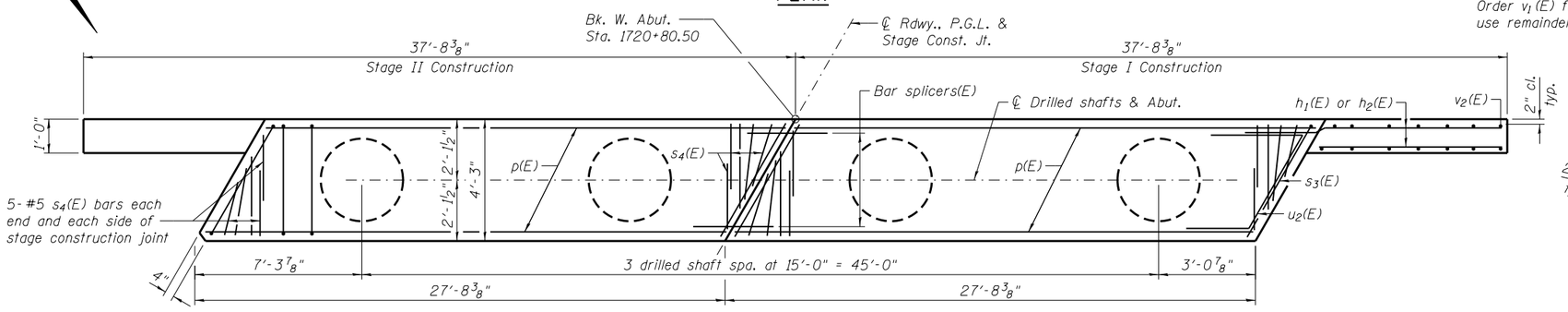

PLAN-CAP

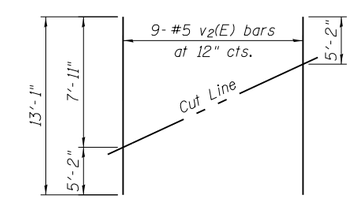

FIELD CUTTING DIAGRAM

Order v1(E) full length. Cut as shown and use remainder of bars in opposite face.

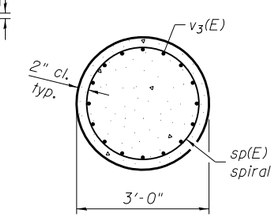

SECTION B-B

LIN ENGINEERING, LTD. Consulting Engineers Springfield, Illinois	USER NAME =	DESIGNED - HP	REVISED -
	FILE NAME =	CHECKED - MTH	REVISED -
	PLOT SCALE =	DRAWN - AJF	REVISED -
	PLOT DATE =	CHECKED - MTH	REVISED -

STATE OF ILLINOIS
DEPARTMENT OF TRANSPORTATION

WEST ABUTMENT
STRUCTURE NO. 075-0511

SHEET NO. 15 OF 19 SHEETS

F.A.P. RTE.	SECTION	COUNTY	TOTAL SHEETS	SHEET NO.
745	108B-3	PIKE	69	50

CONTRACT NO. 72B61

ILLINOIS FED. AID PROJECT