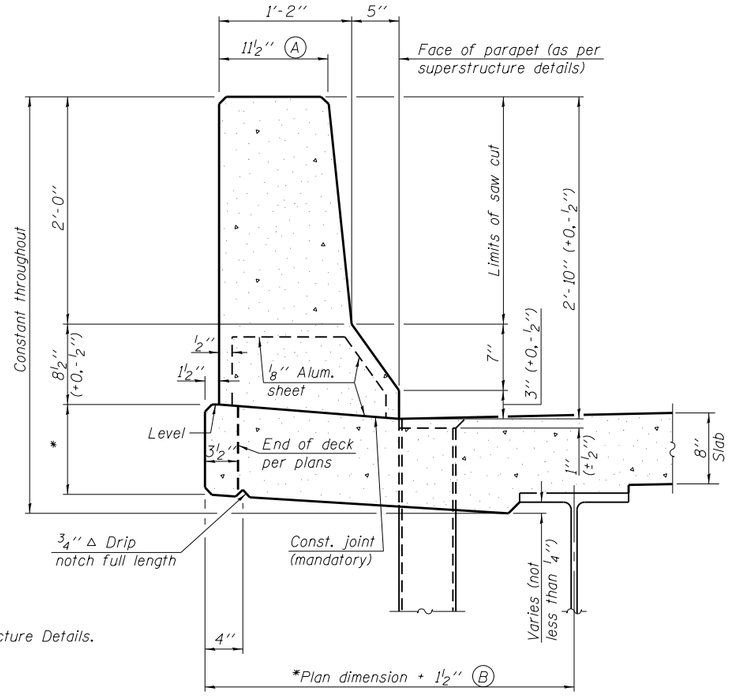

* See Superstructure Details.

SECTION
(Showing dimensions)

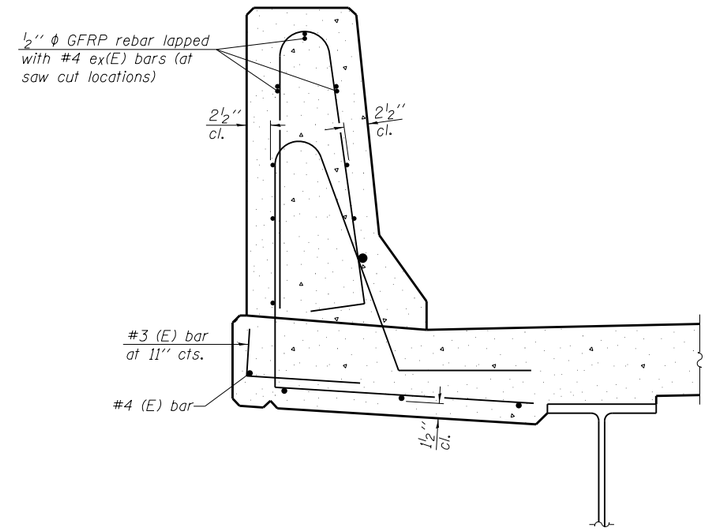

SECTION
(Showing reinforcement clearances for slip forming and additional reinforcement bars)

GENERAL NOTES

All dimensions shall remain the same as shown on superstructure details, except dimensions A and B which are to be revised as shown to provide additional clearance. Additional concrete needed to revise dimension A and B = 0.0165 cu. yds./ft. of parapet.

Place aluminum sheet in curb portion at and near piers. Full thickness saw cut at all joint locations in lieu of cork joint filler.

Steel superstructure shown. Other superstructure types similar.

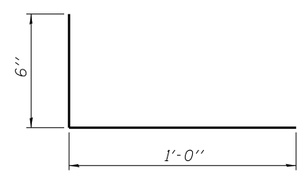

#3 (E) BAR

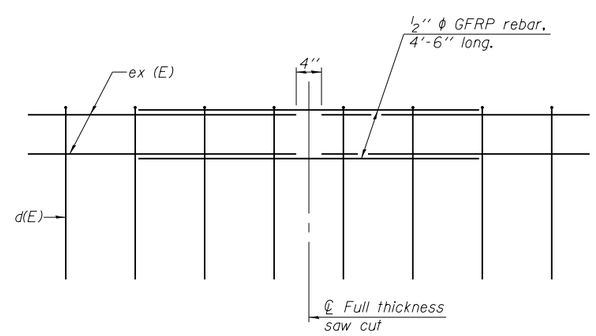

GFRP REBAR STIFFENING DETAIL
(Place as shown in parapet section at each parapet joint location.)

SFP-34 1-27-12

BLANK, WESSELINK, COOK & ASSOCIATES DECATUR, ILLINOIS ENGINEERS - CONSULTANTS DESIGN FIRM NO. 184000894

FILE NAME =	USER NAME =	DESIGNED PBB	REVISED -	STATE OF ILLINOIS DEPARTMENT OF TRANSPORTATION	CONCRETE PARAPET SLIPFORMING OPTION STRUCTURE NO. 058-0049
		CHECKED MCB	REVISED -		
	PLOT SCALE =	DRAWN MLO	REVISED -		
	PLOT DATE =	CHECKED PBB/MCB	REVISED -		SHEET NO. 21 OF 39 SHEETS

F.A.P RTE.	SECTION	COUNTY	TOTAL SHEETS	SHEET NO.
710	(48X-B-2)BR & (48BR)BR	MACON	144	59
		CONTRACT NO. 74438		
		ILLINOIS FED. AID PROJECT		