TYPICAL SECTIONS

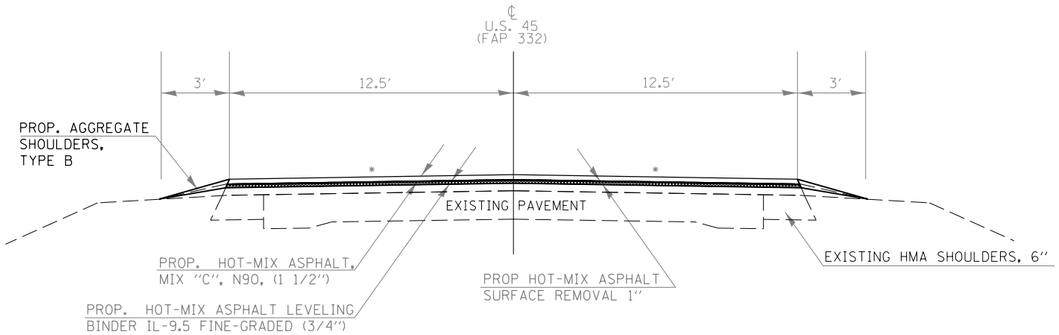

TO BE USED:
STA 1094+61.6 TO STA 1139+82.0
STA 719+40 TO STA 783+60
STA 1204+20 TO STA 1247+17
STA 881+98.5 TO STA 852+45

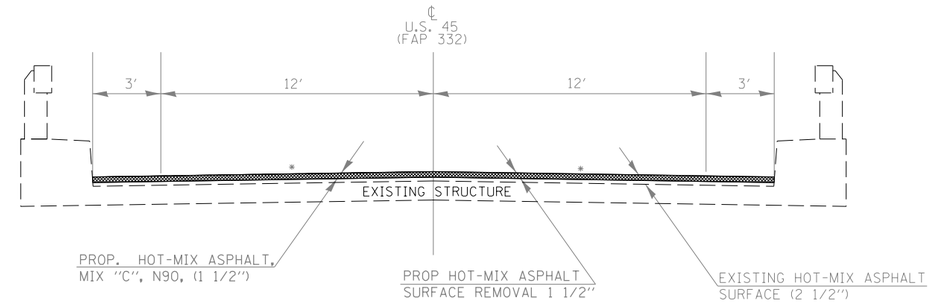

TO BE USED:
STA 744+40 TO STA 745+73
SN 097-0013

*MATCH EXISTING SLOPE

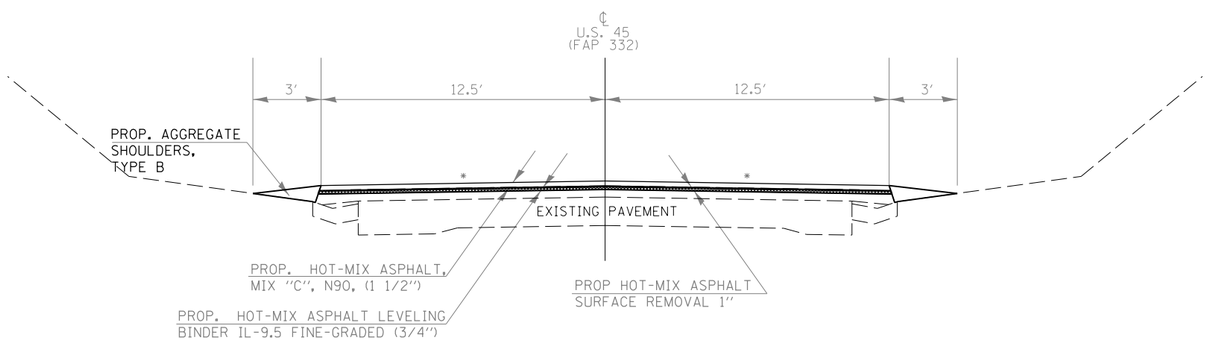

TO BE USED:
STA 1124+52 TO STA 1132+26
STA 1208+79 TO STA 1230+71

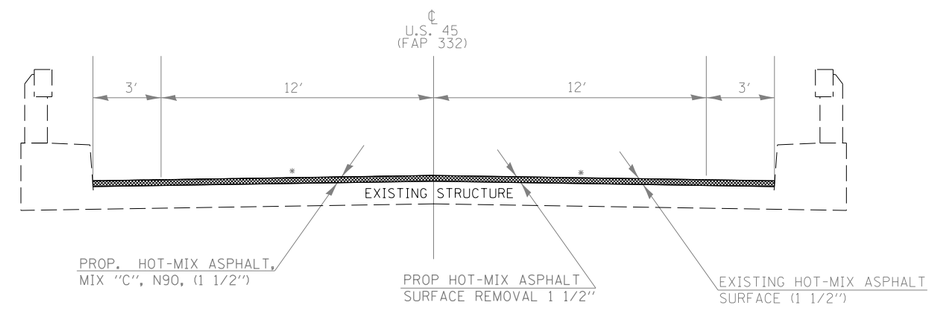

TO BE USED:
STA 760+08 TO STA 761+08
SN 097-0014

FILE NAME =	USER NAME = kelleykd	DESIGNED -	REVISED -	STATE OF ILLINOIS DEPARTMENT OF TRANSPORTATION	TYPICAL SECTIONS – U.S. 45	F.A.P. RTE.	SECTION	COUNTY	TOTAL SHEETS	SHEET NO.
c:\pw_work\pwidot\kelleykd\d0402044\78433-shtb-typ_sch_ties_geopakelements.dgn		DRAWN -	REVISED -			332	28RS-3	WHITE	12	6
	PLOT SCALE = 9.4444 ' / in.	CHECKED -	REVISED -					CONTRACT NO. 78433		
Default	PLOT DATE = 6/30/2014	DATE -	REVISED -		SCALE: SHEET OF SHEETS STA. TO STA.		ILLINOIS FED. AID PROJECT			