CONTRACT NO. 60D30

FAP RTE.	SECTION	COUNTY	TOTAL SHEETS	SHEET NO
338	114 B-I	WILL	15	11
STA.		TO STA.		
FED. ROAD DIST. NO.	ILLINOIS	FED. AID PROJECT		

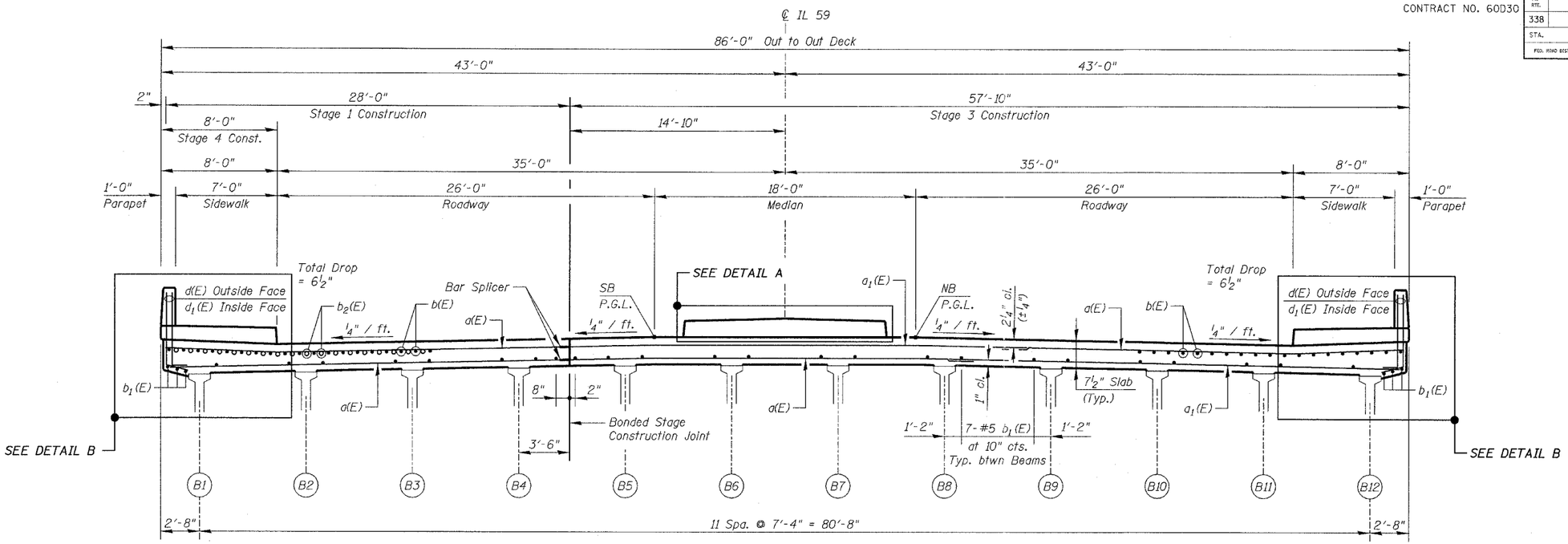

NEAR PIERS

NEAR MIDSPAN

CROSS SECTION
(Looking North)

MIN. BAR LAPS:
#5 = 1'-8"
#7 = 2'-9"

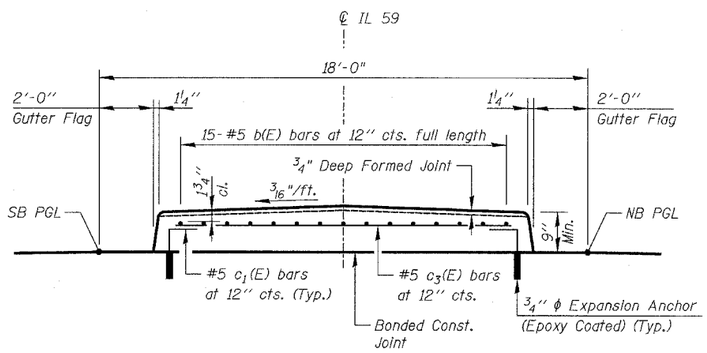

DETAIL A

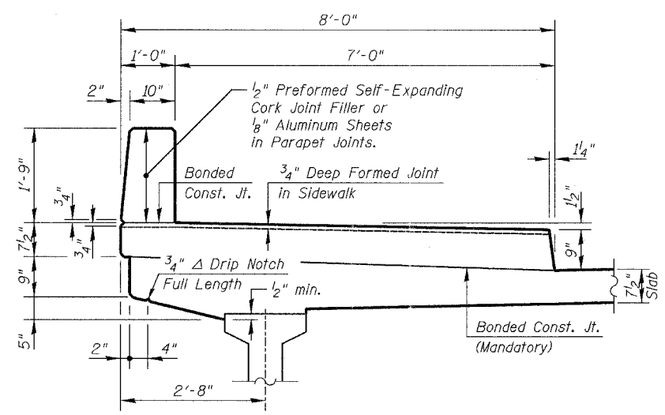

SECTION THRU SIDEWALK & PARAPET
(Showing Dimensions)

Notes:

Reinforcement Bars designated (E) shall be epoxy coated.

The Expansion Anchors shall have a minimum working load tension of 7,500 lbs. The cost of furnishing and installing Expansion Anchors (Epoxy Coated) shall be included in the cost of "Reinforcement Bars, Epoxy Coated".

SHT. S-11 of 15

REVISIONS	
NAME	DATE

ILLINOIS DEPARTMENT OF TRANSPORTATION
DECK CROSS SECTION & DETAILS
ILLINOIS ROUTE 59 OVER DuPAGE RIVER
FAP ROUTE 338 SECTION 114 B-I
WILL COUNTY
STATION 3209+85.00
STRUCTURE NUMBER 099-0339

SCALE: NONE DESIGNED BY: SB DRAWN BY: TL
DATE: 06/29/07 CHECKED BY: WPM CHECKED BY: SB

FOR INFORMATION ONLY

KNIGHT
Engineers & Architects

FILE: L:\66320.02\Cad\Sheets\Roadway Structures\Bridge\66X202-S0339-DK01.dgn