ROUTE NO.	SECTION	COUNTY	TOTAL SHEETS	SHEET NO.
F.A.P. 685	115 BR-1	HANCOCK	44	22
FED. ROAD DIST. NO. 7	ILLINOIS	FED. AID PROJECT-		

SHEET NO. 4
17 SHEETS

Contract #72A90

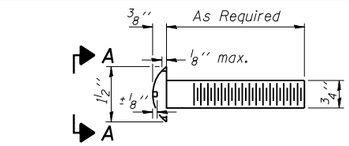

DETAIL OF 3/4" ϕ ROUND HEAD BOLT

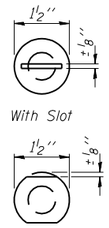

VIEW A-A

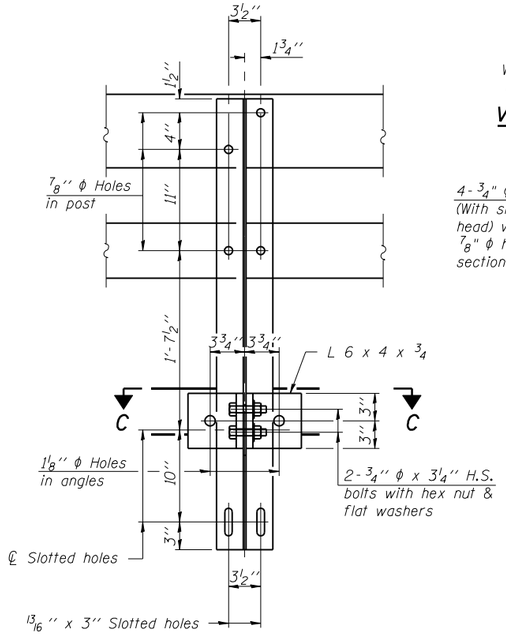

SECTION B-B

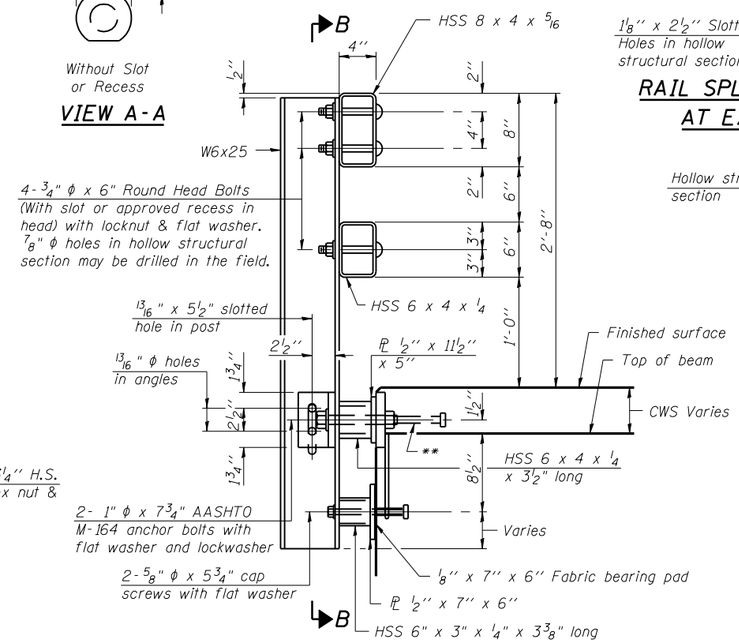

SECTION AT RAIL POST

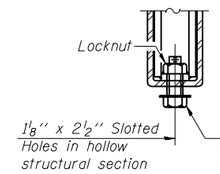

RAIL SPLICE CONNECTION AT EXPANSION JT.

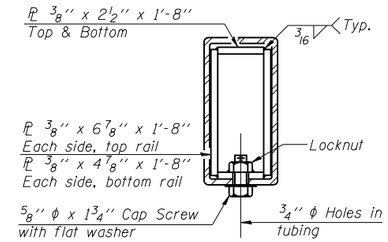

SECTION AT RAIL SPLICE

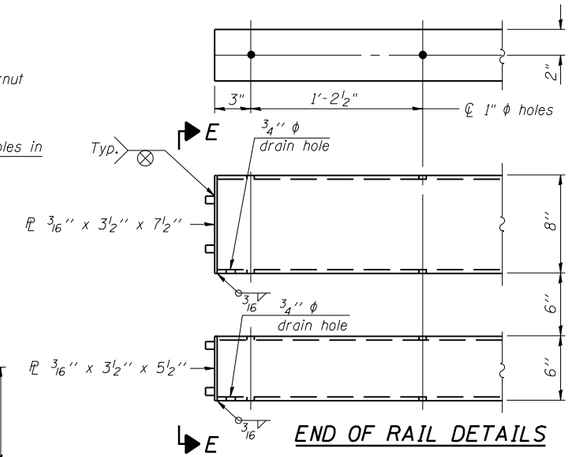

END OF RAIL DETAILS

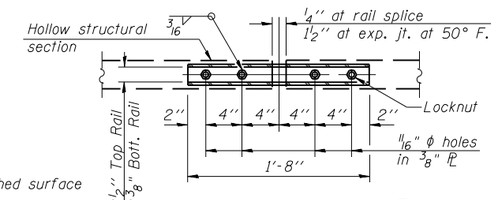

PLAN-BOTT. SPLICE PL TYPICAL

℄ - 5/8" reduced base welded studs. Provide 4 - 5/8" washers and self-locking nuts or nuts and jam nuts for guardrail connection shown on Std. 631032

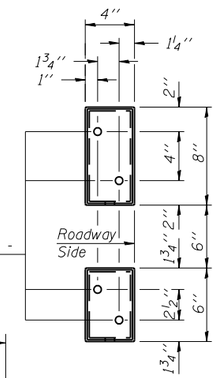

VIEW E-E

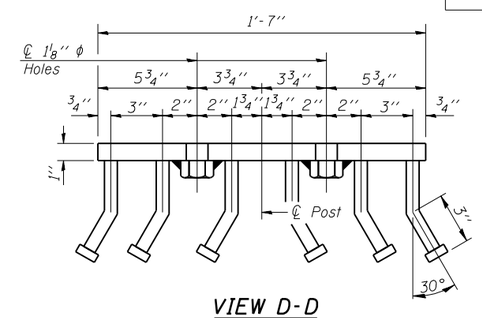

VIEW D-D

Notes:

All field drilled holes shall be coated with an approved zinc rich paint before erection.

For multi-span bridges, sufficient 1/4" x 6" x 1'-2" galvanized steel shims shall be provided to align rail between adjacent spans. Cost included with Steel Bridge Rail, Type SM.

Steel rail elements shall be galvanized according to Article 509.05 of the Standard Specifications.

** The studs of the anchor devices shall be placed below the top reinforcement bars and the outermost longitudinal reinforcement bar shall be placed directly above the studs of the rail post anchor device.

See Sheet 2 of 17 for rail post spacing.

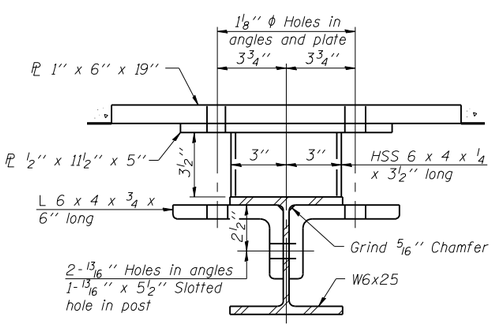

SECTION C-C

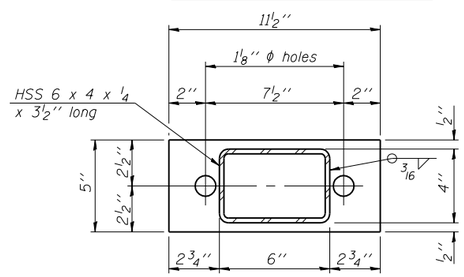

PL 1/2" x 11 1/2" x 5"

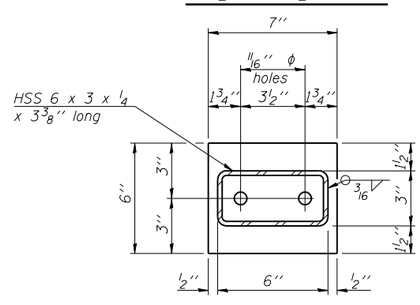

PL 1/2" x 7" x 6"

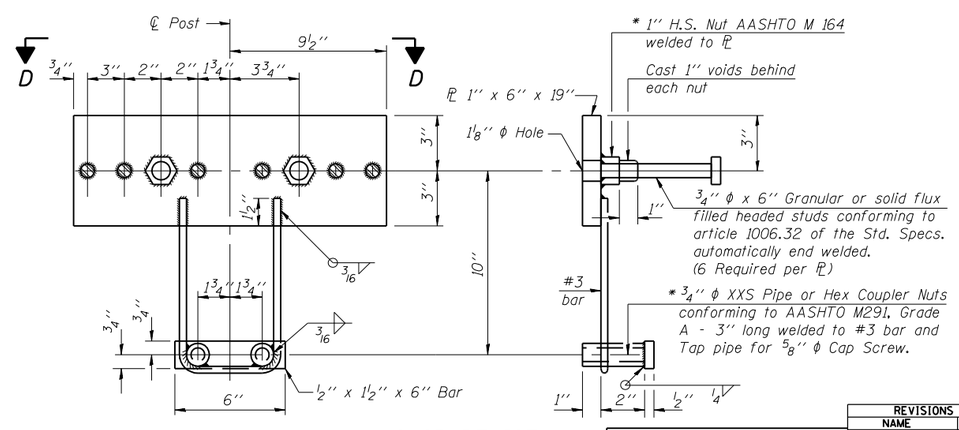

ANCHOR DEVICE

* Threaded areas shall be plugged or blocked off during casting of beam. Galvanized after fabrication.

BILL OF MATERIAL

Item	Unit	Quantity
Steel Railing, Type SM	Foot	172

LIN ENGINEERING, LTD.
Consulting Engineers
Chatham, Illinois

Designed By: DLS | Checked By: MTH | Drawn By: AJF
Date: 04/2007 | Files: 034-0061.dgn

REVISIONS	
NAME	DATE

ILLINOIS DEPARTMENT OF TRANSPORTATION

STEEL RAILING, TYPE SM
IL ROUTE 9 OVER
CAMP CREEK
F.A.P. ROUTE 685 - SECTION 115 BR-1
HANCOCK COUNTY
STA. 607+43.00
STRUCTURE NO. 034-0061

R-34CWS 11-1-06 (6'-3" Maximum Post Spacing) (5" minimum to 7 1/8" maximum CWS thickness)

$FILEABBREV$ 1:35:42 PM 7/2/2007