STATE OF ILLINOIS
DEPARTMENT OF TRANSPORTATION

ROUTE NO.	SECTION	COUNTY	TOTAL SHEETS	SHEET NO.
FAP 716	*	MACON	95	50
FED. ROAD DIST. NO. 9		ILLINOIS	FED. AID PROJECT- ABD	

SHEET NO. 16
28 SHEETS

CONTRACT NO. 74166 *130BR-DB-1

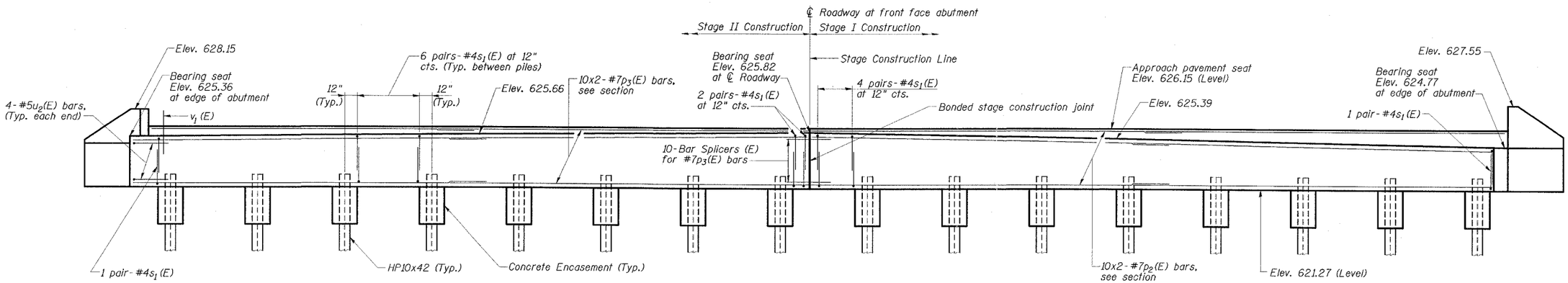

ELEVATION
(Looking South)

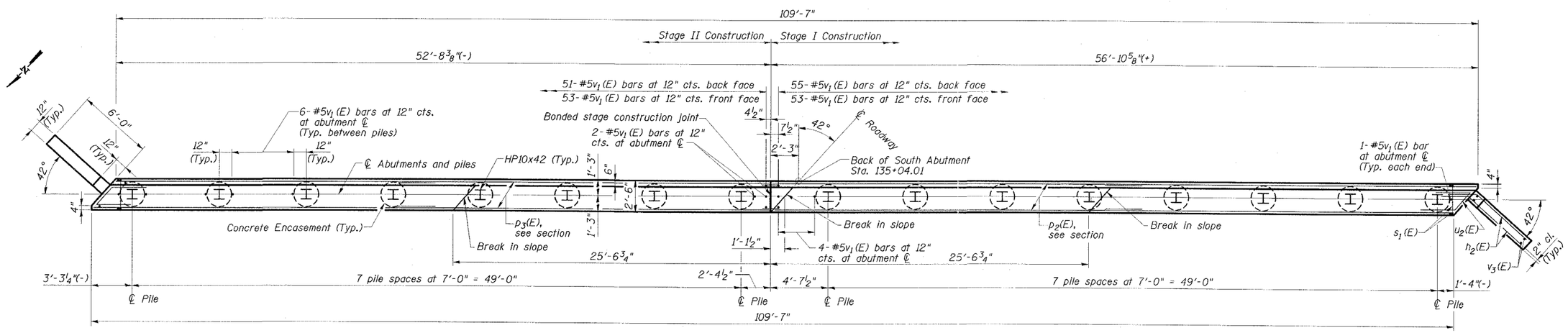

PLAN

PILE DATA

Pile Type & Size: HP10x42 with pile shoes
Nominal Required Bearing: 240 kips
Allowable Resistance Available: 80 kips
Estimated Pile Length: 45'
No. of Production Piles: 15
No. of Test Piles: 1

MIN. BAR LAP

#4 ..... 1'-4"
#7 ..... 2'-11"

NOTES

1. For Bill of Material, Bar Bending Details, Section Thru South Abutment, and Wingwall Details see Dwg. No. 17 of 28.
2. For pile details and concrete encasement details see Dwg. No. 26 of 28.
3. Bars indicated thus: 10x2-#7 etc. indicates 10 lines of bars with 2 lengths per line.

SOUTH ABUTMENT
IL ROUTE 48
OVER SPRING CREEK
FAP ROUTE 716 - SECTION (130BR-1)B-1
MACON COUNTY
STATION 135+77.11
STRUCTURE NO. 058-0135

ESCA CONSULTANTS, INC.

DESIGNED BY:	ELH	03/07
DRAWN BY:	cj	03/07
CHECKED BY:	ELH	06/07
APPROVED BY:	RDP	06/07