CONTRACT NO. 93447

MUNICIPALITY	SECTION	COUNTY	TOTAL SHEETS	SHEET NO.
QUINCY	06-00300-00-LS	ADAMS	69	58

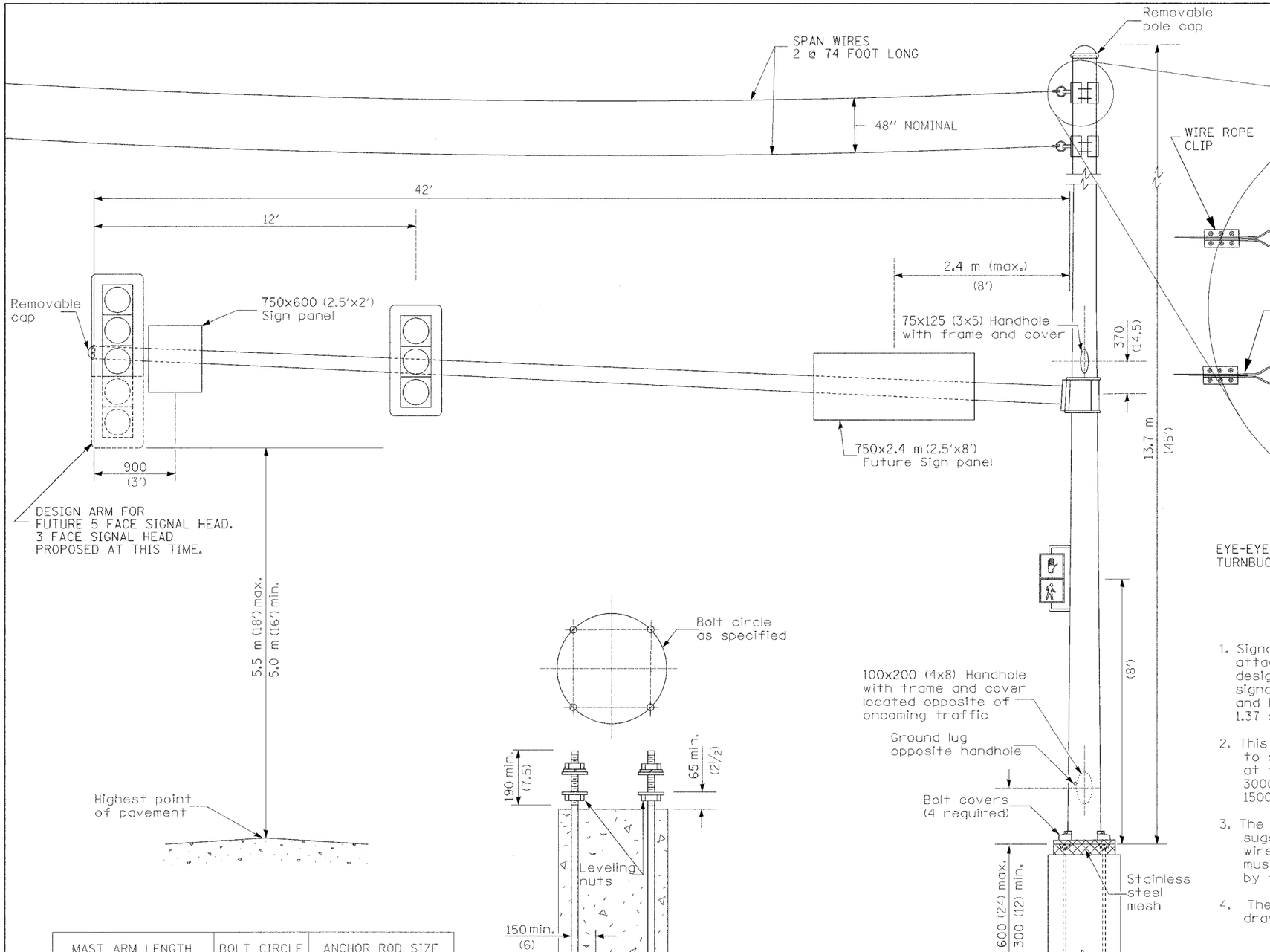

MAST ARM LENGTH	BOLT CIRCLE	ANCHOR ROD SIZE
(42' thru 55')	(21)	(1.75 x 84)

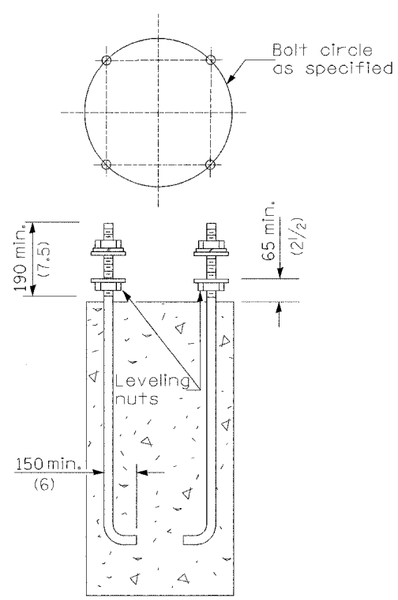

ANCHOR ROD DETAIL

GENERAL NOTES

1. Signal heads, sign panels, and other attachments are shown for minimum design loading purposes only. Each signal head shall weigh 36 kg (80 lb) and have a projected area of 1.37 sq m (14.7 sq ft).
2. This standard shall also be designed to support a banner and span wire system at the top of the pole. Banner to exert 3000 pounds of horizontal force at the pole top. 1500 pounds each wire/clamp.
3. The detail at the pole top represents a suggested system of attaching the span wire to the pole top. The actual method must handle the 3000 pounds of force exerted by the banner.
4. The Contractor shall submit detailed shop drawings to the engineer prior to fabrication.

5TH AND MAINE - NW CORNER

STEEL COMBINATION MAST ARM ASSEMBLY AND POLE