CONTRACT NO. 93447

MUNICIPALITY	SECTION	COUNTY	TOTAL SHEETS	SHEET NO.
QUINCY	06-00300-00-LS	ADAMS	69	65

WHITE LETTERING ON
GREEN REFLECTORIZED BACKGROUND
HIGH INTENSITY
NO BORDER

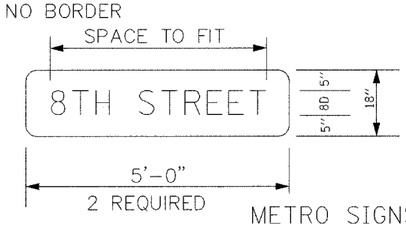

METRO SIGNS

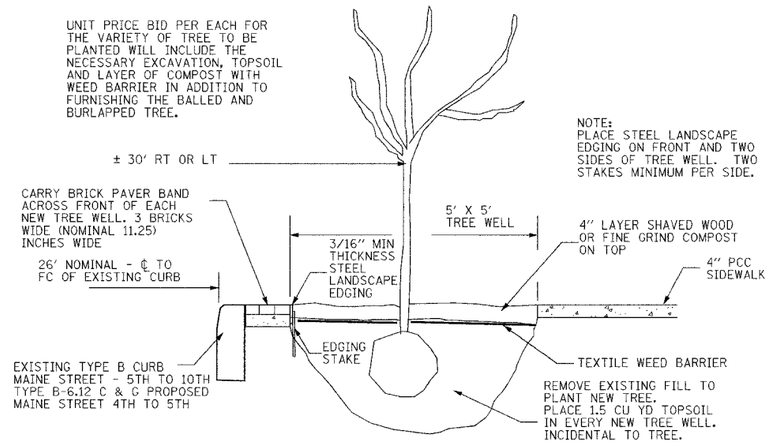

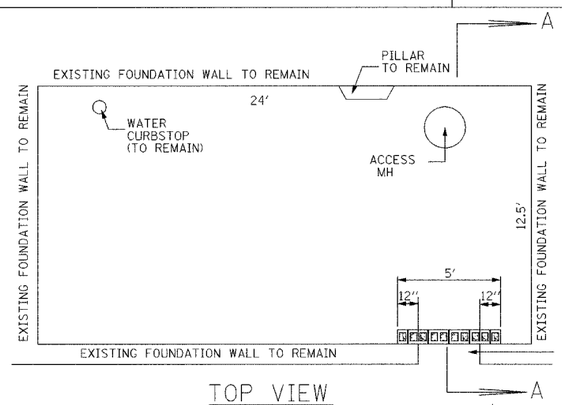

TOP VIEW

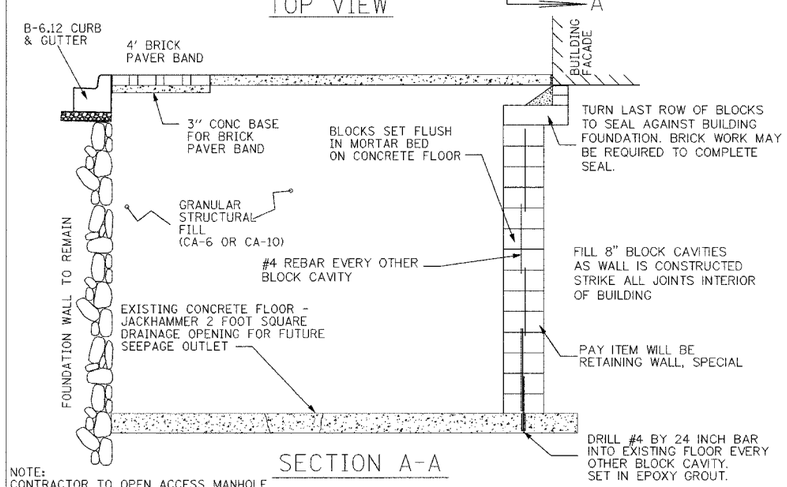

SECTION A-A

NOTE:
CONTRACTOR TO OPEN ACCESS MANHOLE AND USE IT TO PASS DOWN MATERIALS TO CONSTRUCT MASONRY WALL PRIOR TO EXISTING STRUCTURAL SIDEWALK REMOVAL. SECURE ACCESS AT NIGHT TO PREVENT UNAUTHORIZED ENTRY INTO BASEMENT AREA.

VAULT DETAILS
428 MAINE

GENERAL NOTES

Signal heads, sign panels, and other attachments are shown for minimum design loading purposes only. Each signal head shall weigh 36 kg (80 lb) and have a projected area of 1.37 sq m (14.7 sq ft).

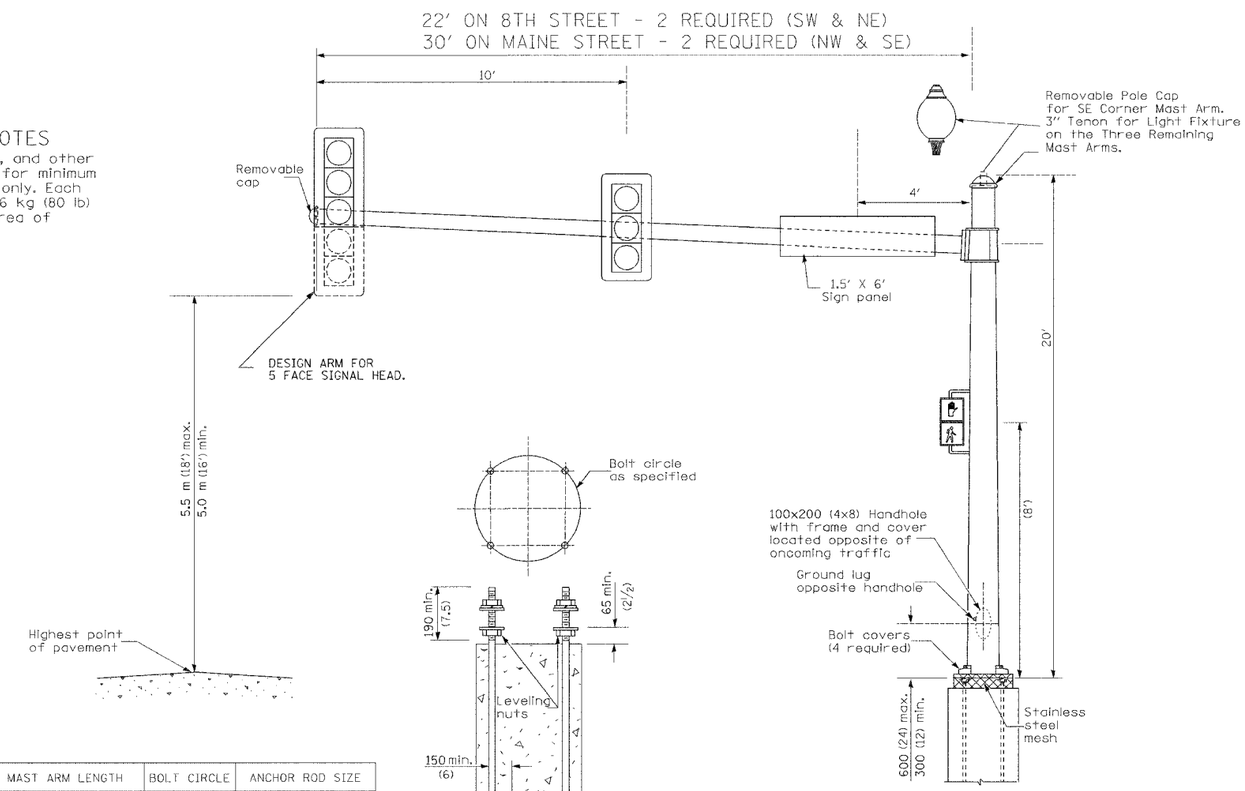

MAST ARM LENGTH	BOLT CIRCLE	ANCHOR ROD SIZE
(22' thru 30')	(18)	(1.50 x 60)

ANCHOR ROD DETAIL

8TH & MAINE MAST ARMS