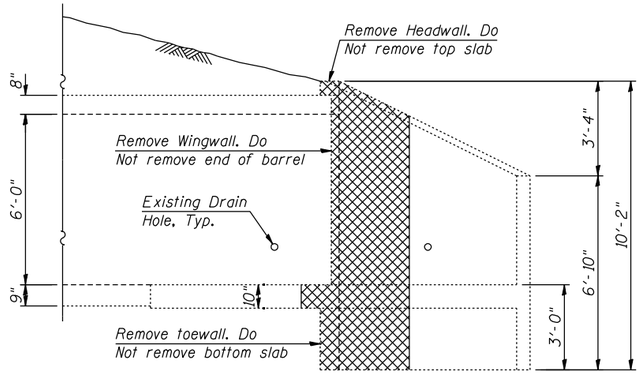

REMOVAL ELEVATION

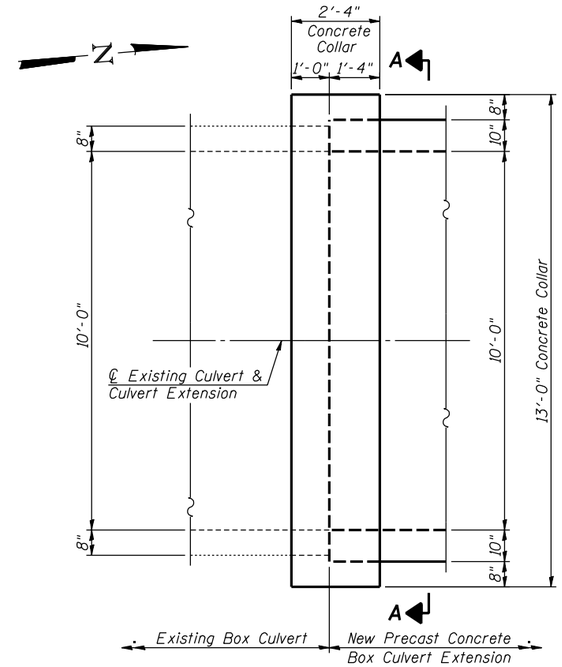

CONCRETE COLLAR PLAN

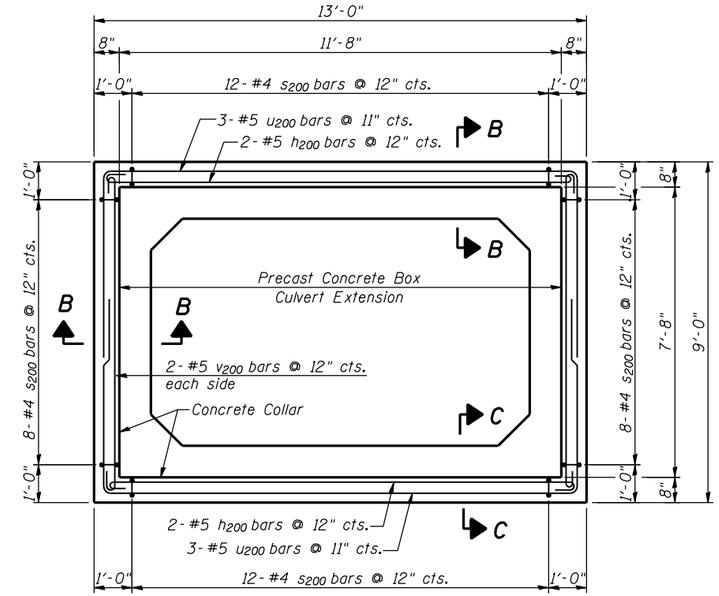

SECTION A-A

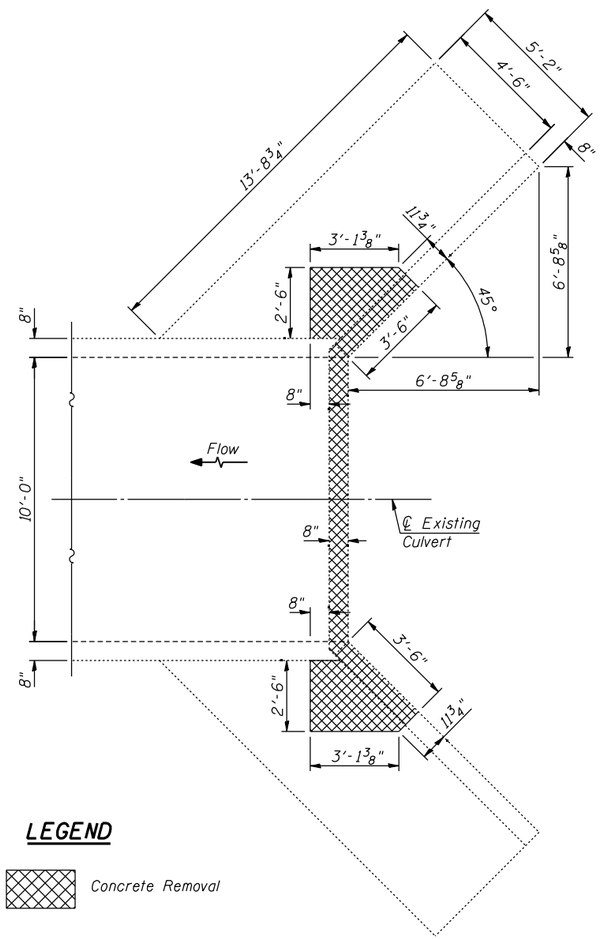

LEGEND

Concrete Removal

REMOVAL PLAN

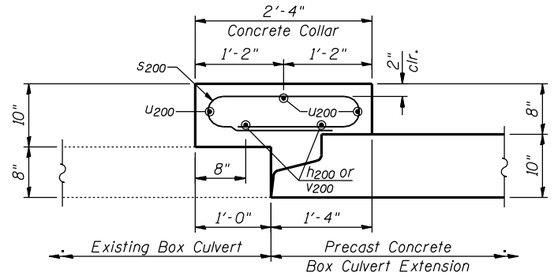

SECTION B-B

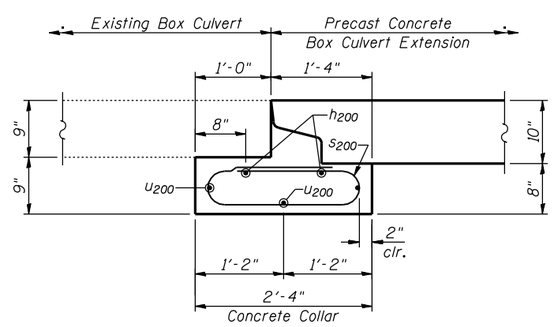

SECTION C-C

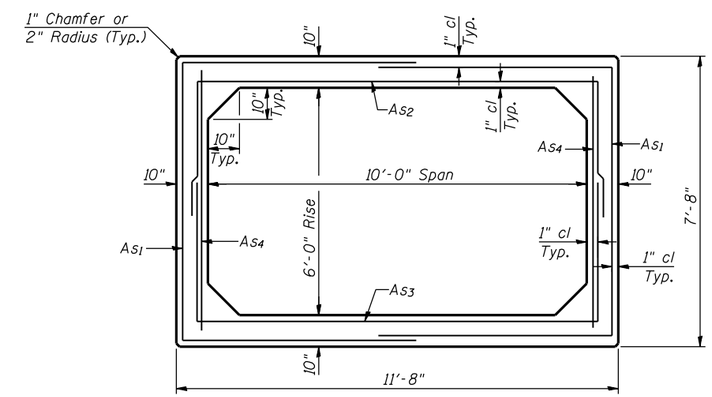

CROSS SECTION OF PRECAST CONCRETE BOX CULVERT EXTENSION

NOTES:

1. Work Sheets SB1, SB2 & SB3 together.
2. Precast Concrete Box Culvert Sections and End Sections shall conform to AASHTO M259 (ASTM C1433). The depth of Design Earth Cover is between one foot and 7 feet.
3. For Bill of Material and Bar Details, see Sheet SB3.
4. The cost for collar excavation shall be included with the pay item Concrete Collar.
5. Longitudinal reinforcement in CROSS SECTION .... is not shown.

H:\Jobs2010\20103003\CAD\Structural\dgn\Culvert_Ext\00\D160133-sb2-collar.dgn
8/8/2012 2:05:20 PM

GRAEF
8501 W. Higgins Road; Suite 280
Chicago, Illinois 60631; (773) 399-0112

USER NAME =	DESIGNED - J.J.G. 7/13/2012	REVISED -	
	CHECKED - J.A.Z. 7/13/2012	REVISED -	
PLOT SCALE =	DRAWN - E.U.B. 7/13/2012	REVISED -	
PLOT DATE =	CHECKED - J.J.G. 7/13/2012	REVISED -	

STATE OF ILLINOIS
DEPARTMENT OF TRANSPORTATION

REMOVAL DETAILS AND NEW CONCRETE COLLAR
U.S. RTE. 30 CULVERT EXTENSION (S.N. 045-0273)

SHEET NO. SB2 OF 3 SHEETS

F.A.P. RTE.	SECTION	COUNTY	TOTAL SHEETS	SHEET NO.
349	(10 & 11VB) R-3	KANE	507	147

CONTRACT NO. 60133

ILLINOIS FED. AID PROJECT