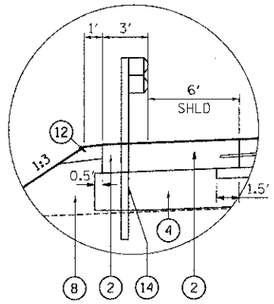

DETAIL A
STA. 147+35.00 TO
STA. 151+48.41

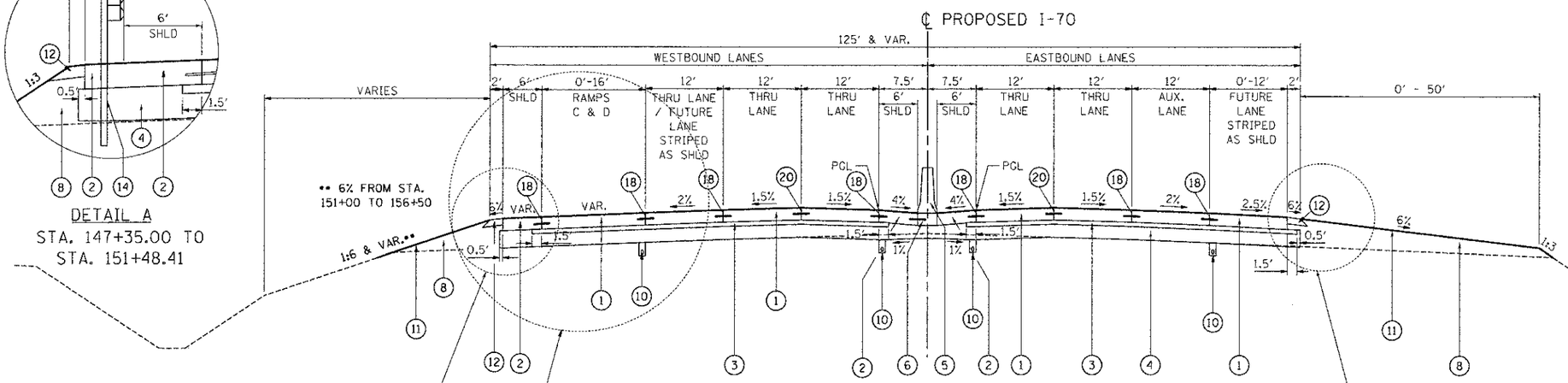

PROPOSED I-70 TYPICAL SECTION
C STA. 147+35.00 TO STA. 156+46.00
STA. 166+83.54 TO STA. 183+93.00
(INSIDE PCC SHOULDERS 11 1/4" BEGIN AT STA. 148+85)

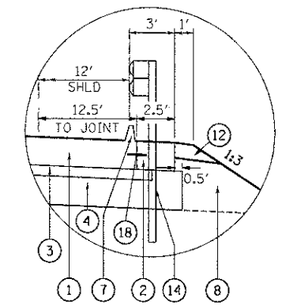

DETAIL B
STA. 147+35.00 TO STA. 150+01.01
GUARDRAIL & CURB END AT 150+01.01

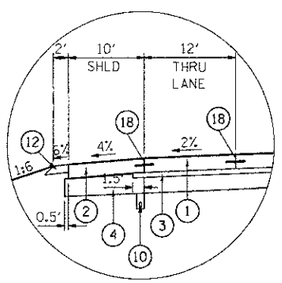

DETAIL C
STA. 173+30.23 TO
STA. 183+93.00

WB SUPERELEVATION TRANSITION
STA. 147+65.00 5.40% TO STA. 152+24.00 N.C.
STA. 182+24.00 N.C. TO STA. 183+93.00 3.30%
STA. 188+68.00 3.30% TO STA. 190+37.00 N.C.

EB SUPERELEVATION TRANSITION
STA. 147+65.00 5.40% TO STA. 150+71.00 N.C.
STA. 181+38.00 N.C. TO STA. 183+93.00 3.30%
STA. 188+68.00 3.30% TO STA. 191+12.00 N.C.

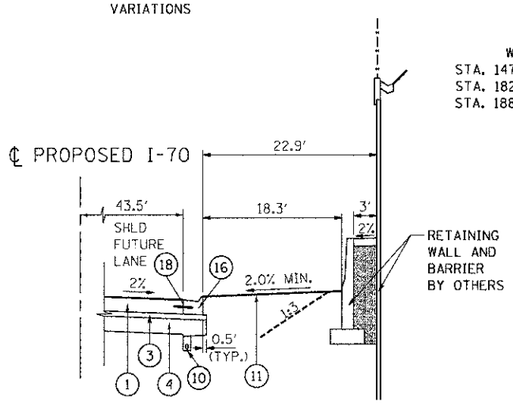

PROPOSED I-70 TYPICAL SECTION
D STA. 171+70.52 TO STA. 172+38.26
STA. 173+15.09 TO STA. 179+67.03

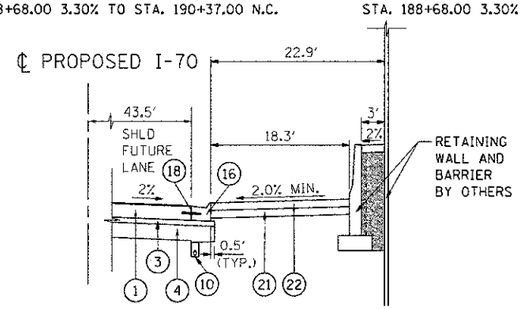

PROPOSED I-70 TYPICAL SECTION
E STA. 172+38.26 STA. 173+15.09

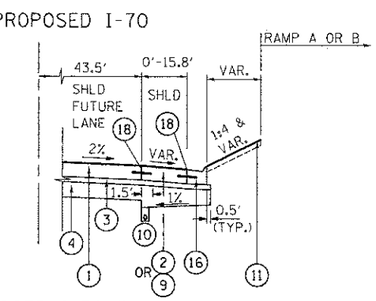

PROPOSED I-70 TYPICAL SECTION
F STA. 163+81.64 TO STA. 171+70.52 &
STA. 179+67.03 TO STA. 182+17.05

PROPOSED LEGEND

1. CONTINUOUSLY REINFORCED PORTLAND CEMENT CONCRETE PAVEMENT 11 1/4"
2. PORTLAND CEMENT CONCRETE SHOULDERS 11 1/4"
3. STABILIZED SUBBASE - HOT-MIX ASPHALT, 4"
4. AGGREGATE SUBGRADE IMPROVEMENT 12"
5. CONCRETE BARRIER, DOUBLE FACE, 42 INCH HEIGHT
6. CONCRETE BARRIER BASE (SEE ROADWAY DETAILS FOR TIE BAR AND JOINT DETAILS)
7. CONCRETE SHOULDER CURB (STD. 610001)
8. EMBANKMENT
9. PORTLAND CEMENT CONCRETE PAVEMENT 11 1/4" (JOINTED)
10. PIPE UNDERDRAINS 4"
11. SEEDING, (LANDSCAPING BY OTHERS)
12. AGGREGATE SHOULDERS, TYPE B 6"
13. STR. TIE BAR (SEE STR. SHEETS FOR DETAILS)
14. STEEL PLATE BEAM GUARD RAIL, TYPE A, 6 FOOT POSTS
15. LONGITUDINAL KEYED JOINT (WITHOUT TIE BARS)
16. COMBINATION CONCRETE CURB AND GUTTER, TYPE M-4.24
17. ANCHORAGE SLAB & BARRIER WALL (SEE DETAILS & BILL OF MATERIALS SHEETS 227 - 232
18. LONGITUDINAL CONSTRUCTION JOINT WITH NO. 6 TIE BARS AT 24" CTS.
19. LONGITUDINAL SAWED JOINT WITH NO. 6 TIE BARS AT 18" CTS.
20. LONGITUDINAL SAWED JOINT WITH NO. 6 TIE BARS AT 30" CTS.
21. AGGREGATE BASE COURSE, TYPE B 6"
22. CONCRETE MEDIAN SURFACE, 6 INCH

ALL TIE BARS SHALL BE EPOXY COATED

[ ] = INDICATES PAYMENT INCLUDED IN COST OF ANOTHER ITEM

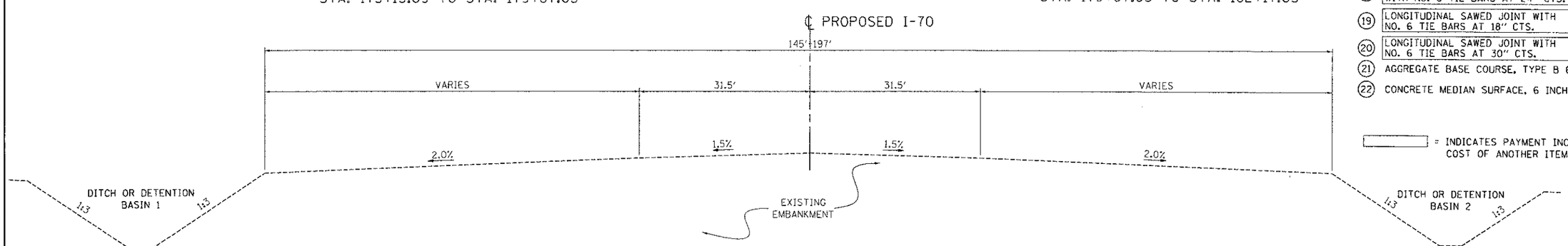

EXISTING I-70 TYPICAL SECTION
G STA. 147+35.00 TO STA. 192+00.00
(CONSTRUCTED IN CONTRACT 76C44 & 76C41)
EMBANKMENT CROSS SLOPES WILL VARY
IN SUPERELEVATION SECTIONS

NOTE: THE COST OF THE ADDITIONAL THICKNESS OF AGGREGATE SUBGRADE IMPROVEMENT 12" REQUIRED BEYOND THE LIMITS OF THE STABILIZED SUBBASE HMA, 4" OR REQUIRED TO SLOPE THE SHOULDER SUBGRADE TO THE UNDERDRAINS SHALL BE INCLUDED IN THE CONTRACT UNIT PRICE PER SQ YD FOR AGGREGATE SUBGRADE IMPROVEMENT 12".

FILE NAME = $FILEL$	USER NAME = $USER$	DESIGNED - JB	REVISED -
		DRAWN - JB	REVISED -
	PLOT SCALE = $SCALE$	CHECKED - ACL	REVISED -
TENG & ASSOCIATES, INC. ENGINEERS/ARCHITECTS/PLANNERS CHICAGO, ILLINOIS	PLOT DATE = $DATE$	DATE - 06/29/12	REVISED -

STATE OF ILLINOIS
DEPARTMENT OF TRANSPORTATION
I-70 CONNECTION

PROPOSED I-70
TYPICAL SECTIONS 2

SCALE: N.T.S. | SHEET NO. 2 OF 5 SHEETS | STA. | TO STA.

F.A.P. RTE.	SECTION	COUNTY	TOTAL SHEETS	SHEET NO.
998	82-1R	ST. CLAIR	294	15
		CONTRACT NO. 76C43		
FED. ROAD DIST. NO.	ILLINOIS	FED. AID PROJECT		

..\DBCONN-99-MOTIFLDGN,..\DBCONN-88-SGRDERLDGN,..\DBCONN-88-TYPSCLDGN,..\DBCONN-88-LEGENDLDGN,..\DBCONN-88-MOTIFLDGN
6-27-2012,11:28:13 BONDHAJD \\FS-0044\VAH\VAULT\D-TRANS_07\2262\20868-001\CIVIL\CAD\99 ALL CONTRACTS\CONN\SHEETS CONTRACT 08\DBCONN-08-SHT-TYPICAL2.DGN