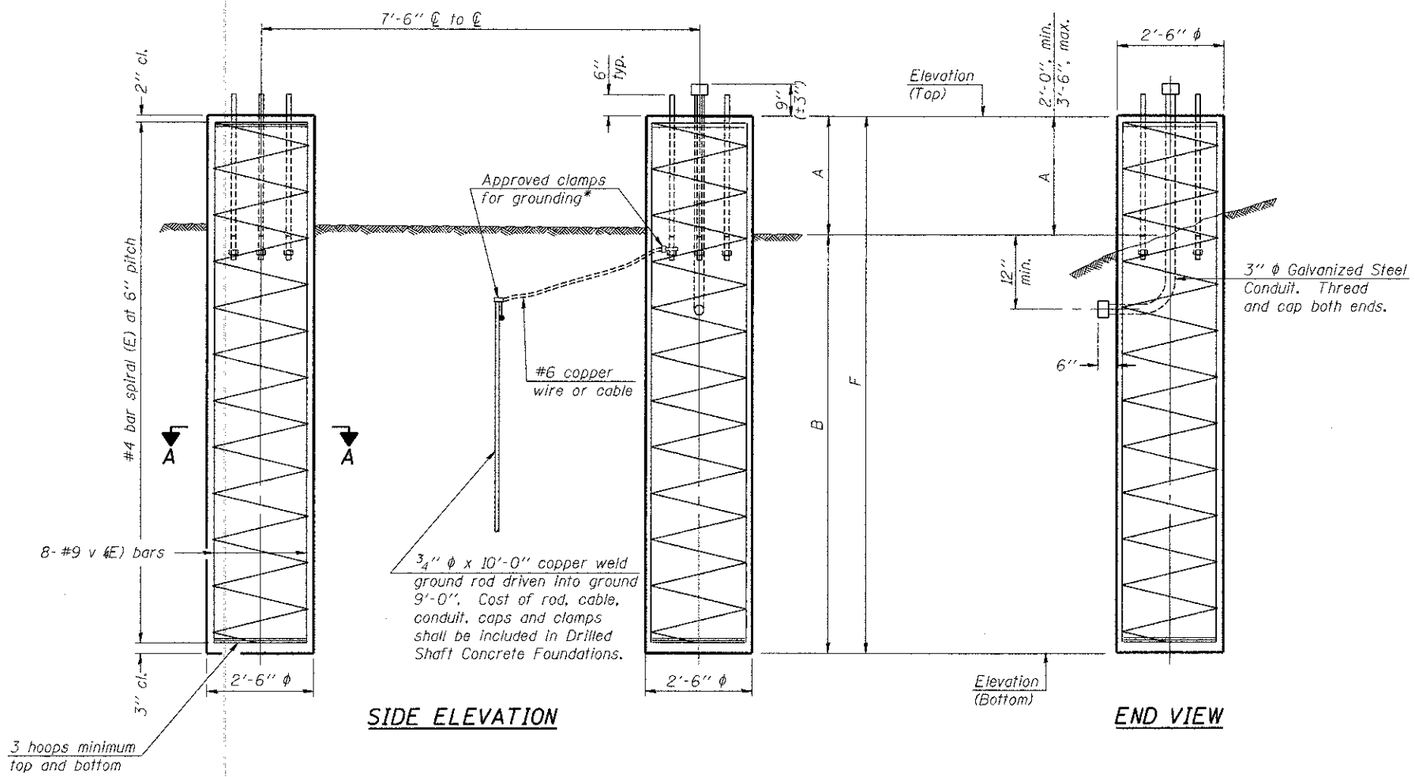

SIDE ELEVATION

END VIEW

BAR LIST - EACH FOUNDATION

Bar	Number	Size	Length	Shape
v4(E)	16	#9	F less 5"	——
#4 bar spiral (E) - see Side Elevation				

NOTES:

The foundation dimensions shown are based on the presence of mostly cohesive soils with an average Unconfined Compressive Strength (Qu) of at least 1.25 tsf, which must be determined by previous soil investigations at the jobsite. When other conditions are indicated, the boring data will be included in the plans and the foundation dimensions shown will be the result of site specific designs.

If the conditions encountered are different than those indicated, the Contractor shall notify the Engineer to determine if the foundation dimensions need to be modified. If dimensions "B" or "F" are revised by more than 12" by the Contractor, "as-built" plans shall be prepared and submitted to the District Bureau of Operations for future reference.

No sonotubes or decomposable forms shall be used below the lower conduit entrance.

Permanent metal forms or other shielding may not be left in place below that elevation without the Engineer's written permission.

Concrete shall be placed monolithically, without construction joints.

Backfill shall be placed per Article 502 of Standard Specification and prior to erection of support column.

A normal surface finish followed by a Bridge Seat Sealer application will be required on concrete surfaces above the lowest elevation 6" below finished ground line. Cost included in Drilled Shaft Concrete Foundation.

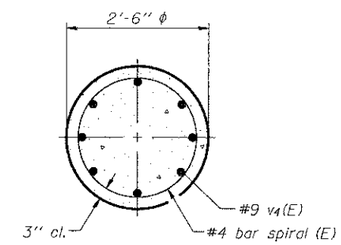

SECTION A-A

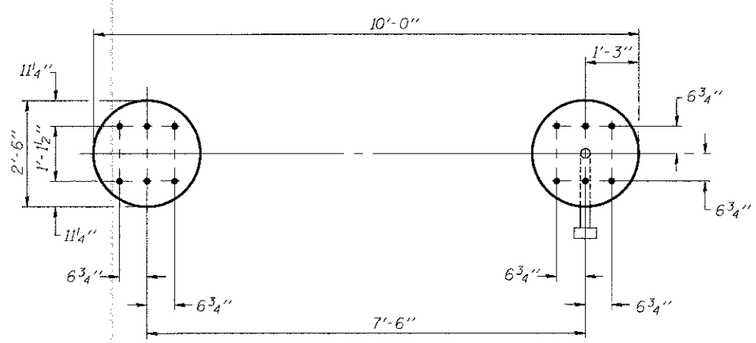

PLAN

For anchor rod size and placement, see Support Frame Detail Sheet.

* Anchor rod shall be ground or filed to bright metal at clamp and cable connection location.

DETAILS FOR 8" ϕ SUPPORT FRAME TYPE I-A TRUSS

Structure Number	Station	Left Foundation					Right Foundation					Class DS Concrete (Cu. Yds.)
		Elevation Top	Elevation Bottom	A	B	F	Elevation Top	Elevation Bottom	A	B	F	
8S082I070R002.2	188+00	-	-	-	-	-	436.77	418.27	2'-0"	16'-6"	18'-6"	6.7

OS4-F2 6-1-12

FILE NAME = $FILEL$	USER NAME = @USER$	DESIGNED - MDJ	REVISED -	STATE OF ILLINOIS DEPARTMENT OF TRANSPORTATION I-70 CONNECTION	OVERHEAD SIGN STRUCTURES DRILLED SHAFT DETAILS	F.A.P. RTE. 998	SECTION 82-1R	COUNTY ST. CLAIR	TOTAL SHEETS 294 / SHEET NO. 191
		DRAWN - MDJ	REVISED -					CONTRACT NO. 76C43	
TENG & ASSOCIATES, INC. ENGINEERS/ARCHITECTS/PLANNERS CHICAGO, ILLINOIS	PLOT SCALE = $SCALE$	CHECKED - JLR	REVISED -		SCALE: SHEET NO. 12 OF 14 SHEETS STA. TO STA.	FED. ROAD DIST. NO.	ILLINOIS	FED. AID PROJECT	
	PLOT DATE = $DATE$	DATE - 06/29/12	REVISED -						

...\DBCONN-08-DESIGNC.DGN ...\DBCONN-08-BORDER.DGN 6-27-2012, 9:56:56 BCONDHUJO \\FS-0044\VAULT\D-TRANS.07\2262\28868-001\STRUCT\CAD\01 DESIGN\SIGNSTRUCTURE\SHEET\DBCONN-08-SHT-SIGNSM.DGN