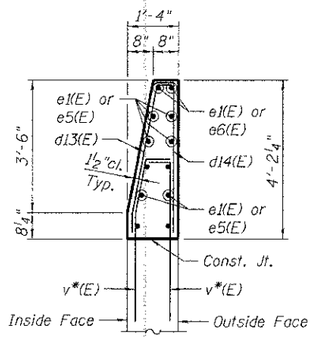

SECTION R-R

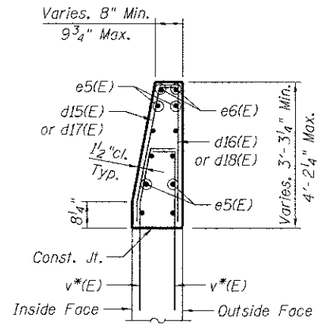

SECTION S-S

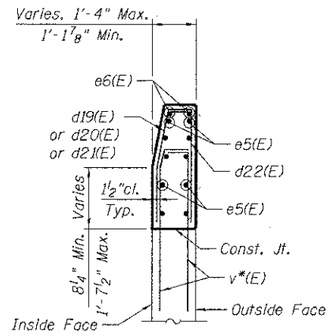

SECTION T-T

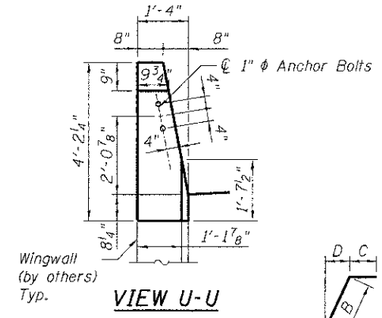

VIEW U-U

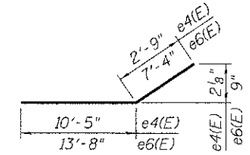

Bars e4(E) & e6(E)

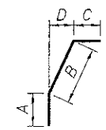

Bar	A	B	C	D
d10(E)	8"	3'-5"	7"	7⅝"
d12(E)	8"	3'-5"	1'-3"	7⅝"
d13(E)	6½"	3'-5½"	5"	7¾"
d15(E)	11"	3'-1"	5"	7"
d17(E)	8"	2'-11"	6"	6½"
d19(E)	8½"	2'-8"	6½"	6"
d20(E)	1'-0½"	2'-3"	6½"	5⅛"
d21(E)	1'-5"	1'-10½"	6½"	4⅛"

Bars d10(E), d12(E), d13(E), d15(E), d17(E), d19(E), d20(E) & d21(E)

BAR LIST

Bar	No.	Size	Length	Shape
e1(E)	33	#5	6'-0"	
e2(E)	21	#5	28'-2"	
e3(E)	1	#5	18'-3"	
e4(E)	1	#5	13'-2"	
e5(E)	10	#5	21'-0"	
e6(E)	2	#5	21'-0"	
d8(E)	15	#5	4'-5"	
d9(E)	2	#5	3'-8"	
d10(E)	13	#5	4'-8"	
d11(E)	21	#5	5'-2"	
d12(E)	21	#5	5'-4"	
d13(E)	17	#5	4'-5"	
d14(E)	17	#5	4'-4"	
d15(E)	4	#5	4'-5"	
d16(E)	4	#5	4'-2"	
d17(E)	4	#5	4'-1"	
d18(E)	4	#5	4'-0"	
d19(E)	2	#5	3'-11"	
d20(E)	2	#5	3'-10"	
d21(E)	2	#5	3'-10"	
d22(E)	6	#5	3'-9"	
d23(E)	39	#5	3'-9"	
d24(E)	39	#5	3'-8"	

* Reinforcement bars supplied by others (contract 76C44).

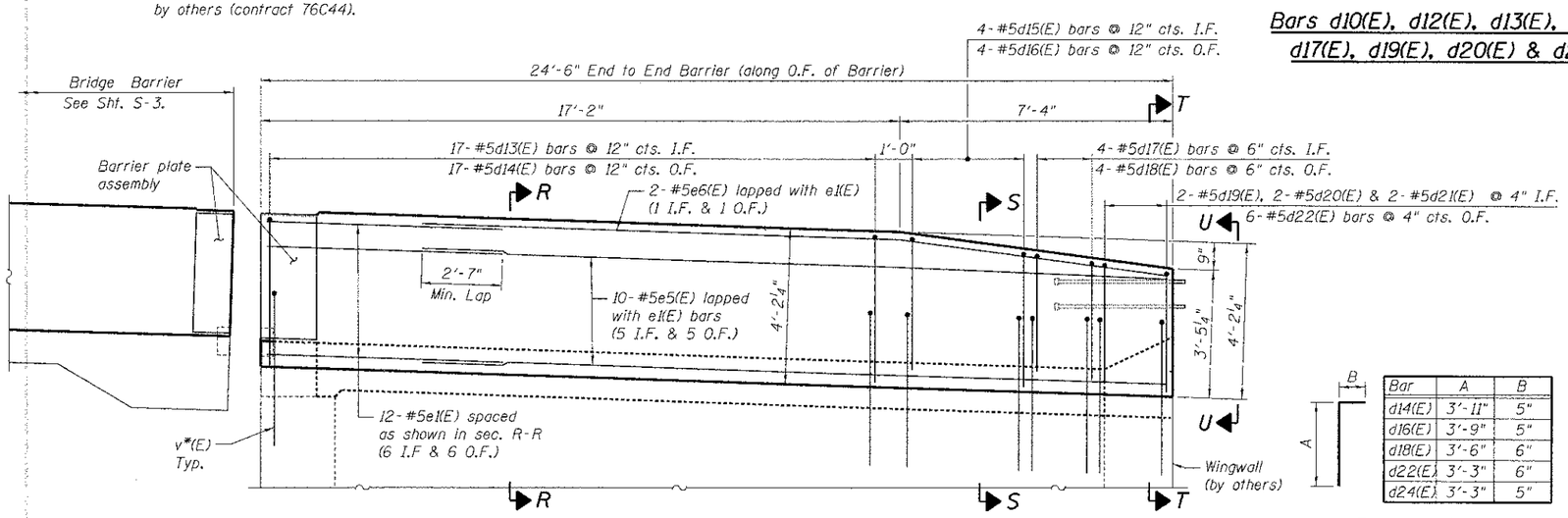

BARRIER ELEVATION K-K

Looking North

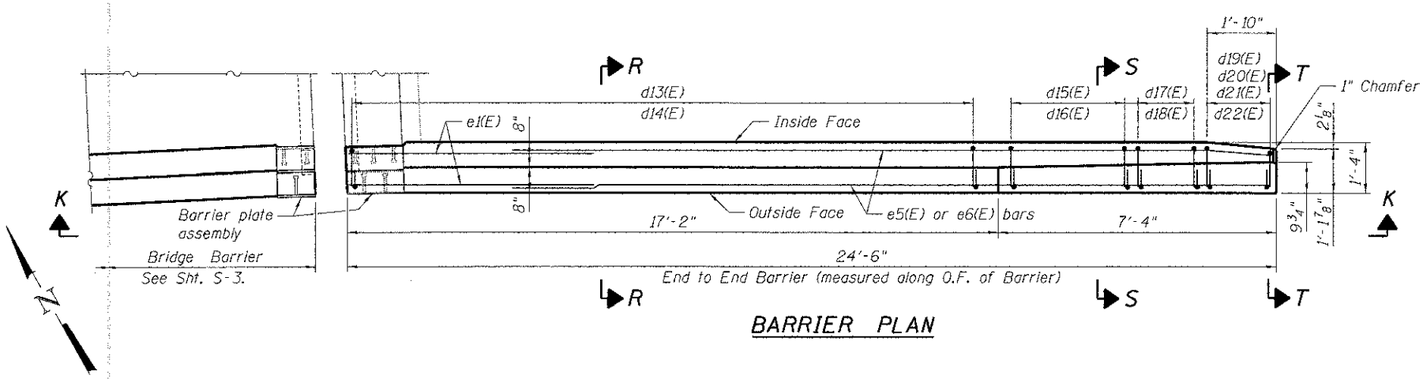

BARRIER PLAN

Bar	A	B
d14(E)	3'-11"	5"
d16(E)	3'-9"	5"
d18(E)	3'-6"	6"
d22(E)	3'-3"	6"
d24(E)	3'-3"	5"

Bars d14(E), d16(E), d18(E), d22(E) & d24(E)

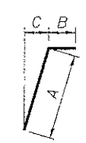

Bar	A	B	C
d8(E)	3'-3"	1'-2"	7¼"
d9(E)	3'-2"	6"	7⅛"
d11(E)	3'-11"	1'-3"	8½"
d23(E)	3'-4"	5"	7½"

Bars d8(E), d9(E), d11(E) & d23(E)

BILL OF MATERIAL

Item	Unit	Total
Concrete Superstructure	Cu. Yd.	29.6
Reinforcement Bars, Epoxy Coated	Pound	2,060
Protective Coat	Sq. Yd.	92

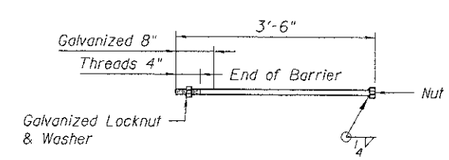

1" ϕ ANCHOR BOLT

(Cost included with Concrete Superstructure)

NOTES:

1. Barrier concrete shall be paid for as Concrete Superstructure.
2. Reinforcement shall be paid for as Reinforcement Bars, Epoxy Coated.
3. I.F. indicates inside face
   O.F. indicates outside face

FILE NAME = $FILEL$	USER NAME = $USER$	DESIGNED - KK	REVISED -	STATE OF ILLINOIS DEPARTMENT OF TRANSPORTATION I-70 CONNECTION OVER NS, TRRA, MCT AND INDUSTRIAL DR.	BARRIER DETAILS 2
TENG & ASSOCIATES, INC. ENGINEERS/ARCHITECTS/PLANNERS CHICAGO, ILLINOIS		DRAWN - FD	REVISED -		
	PLOT SCALE = $SCALE$	CHECKED - JLR	REVISED -		
	PLOT DATE = $DATE$	DATE - 06/29/12	REVISED -		SCALE: SHEET NO. S-5 OF S-5 STA. 134+22.00 TO STA.

F.A.P. RTE.	SECTION	COUNTY	TOTAL SHEETS	SHEET NO.
998	82-1R	ST. CLAIR	294	226
SN 082-0318 (EB) & 0319 (WB)		CONTRACT NO. 76C43		
FED. ROAD DIST. NO.	ILLINOIS	FED. AID PROJECT		

-SHT-AP.DGN
\082031B-CONN-03-001-AP.DGN ...\082031B-CONN-99-001-BD.DGN ...\082031B-CONN-05-001-AP.DGN
6-27-2012 16:59:59 BONDHUJU \\FS-DB44\AM\VARIE\D-TRANS\07-2202\20868-001\STRUCTURAL\01 DESIGN\082031B\SHEET\082031B-CONN-03-024-SHT-AP.DGN