F.A.I. RTE.	SECTION	COUNTY	TOTAL SHEETS	SHEET NO.
90/94	*	COOK	312	16
STA.	TO STA.			
FED. ROAD DIST. NO. 1	ILLINOIS	FED. AID PROJECT		

60A62 * (1919.15, 2021-922 PT1 & PT2) R-1

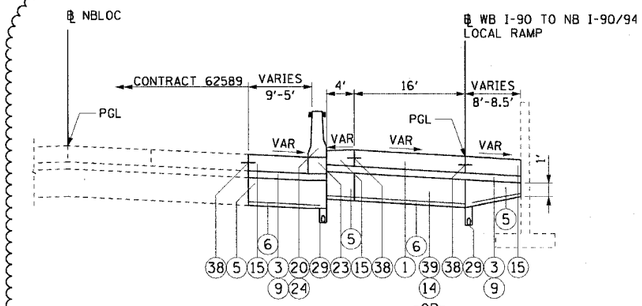

1 TYPICAL SECTION NB LOCAL LANES -OR- 5

STA 4409+15.56 TO STA 4411+10.38

SUPERELEVATION TRANSITION: STA 4409+15.56 TO STA 4410+24.73
FULL SUPERELEVATION: STA 4410+24.73 TO STA 4421+47.88 (6.0% RT)

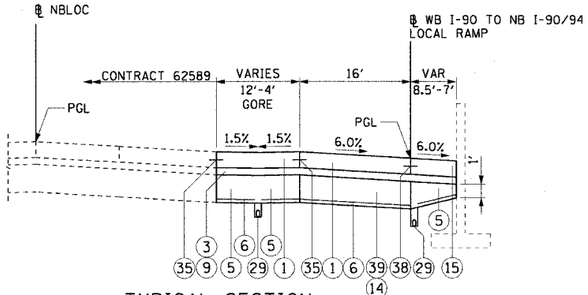

2 TYPICAL SECTION NB LOCAL LANES -OR- 5

STA 4411+10.38 TO STA 4413+77.64

FULL SUPERELEVATION: STA 4410+24.73 TO STA 4421+47.88 (6.0% RT)

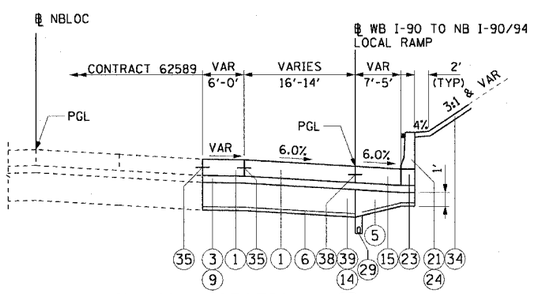

3 TYPICAL SECTION NB LOCAL LANES -OR- 5

STA 4413+77.64 TO STA 4417+50.00

FULL SUPERELEVATION: STA 4410+24.73 TO STA 4421+47.88 (6.0% RT)

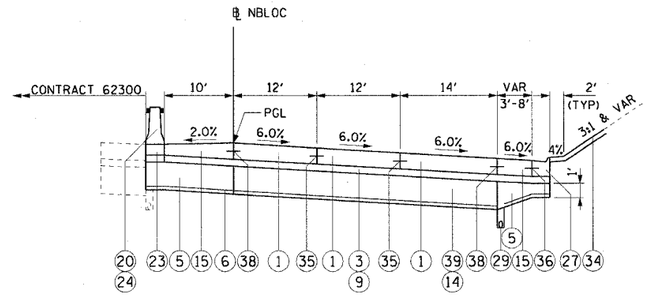

4 TYPICAL SECTION NB LOCAL LANES -OR- 5

STA 4417+50.00 TO STA 4421+11.20

FULL SUPERELEVATION: STA 4410+24.73 TO STA 4421+47.88 (6.0% RT)
SUPERELEVATION TRANSITION: STA 4421+47.88 TO STA 4424+89.88

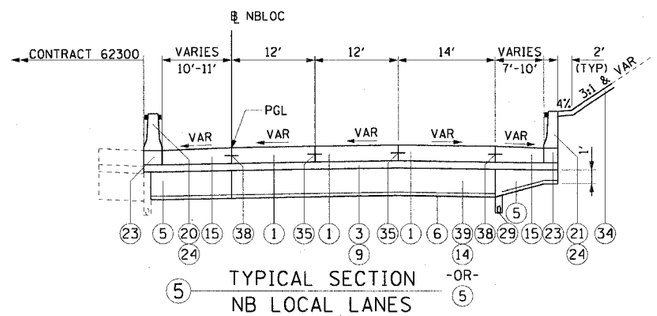

5 TYPICAL SECTION NB LOCAL LANES -OR- 5

STA 4421+11.20 TO STA 4426+45.57

FULL SUPERELEVATION: STA 4410+24.73 TO STA 4421+47.88 (6.0% RT)
SUPERELEVATION TRANSITION: STA 4421+47.88 TO STA 4424+89.88

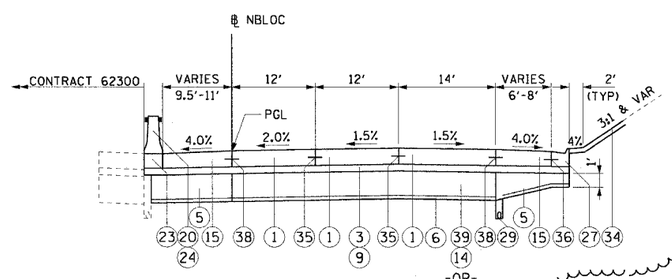

-OR- 5

6 TYPICAL SECTION NB LOCAL LANES

STA 4426+45.57 TO STA 4432+83.78

PROPOSED LEGEND:

1. CONTINUOUSLY REINFORCED PORTLAND CEMENT CONCRETE PAVEMENT 14" AND PAVEMENT REINFORCEMENT 14"
3. BITUMINOUS STABILIZED SUB-BASE, 4½" (1)
5. SUB-BASE GRANULAR MATERIAL, TYPE B 24"
6. GEOTECHNICAL FABRIC FOR GROUND STABILIZATION
9. BITUMINOUS MATERIALS (PRIME COAT)
14. EXCAVATE AND PLACE EXISTING GRANULAR MATERIAL (1)
15. PORTLAND CEMENT CONCRETE SHOULDERS 14" & VARIES
18. CONCRETE MEDIAN SURFACE, 6" (SPECIAL)
20. CONCRETE BARRIER, DOUBLE FACE, 32" HEIGHT
21. CONCRETE BARRIER, SINGLE FACE, 32" HEIGHT
23. BARRIER BASE
24. BARRIER WALL MARKERS, TYPE C (80' C-C)
26. COMBINATION CONCRETE CURB AND GUTTER, TYPE M-2.24
27. COMBINATION CONCRETE CURB AND GUTTER, TYPE M-4.24
28. COMBINATION CONCRETE CURB AND GUTTER, TYPE M-4.48 (MODIFIED)
29. PIPE UNDERDRAINS 6"
30. RETAINING WALL
31. MODIFIED EXISTING RETAINING WALL
32. SAND BACKFILL
33. GUARDRAIL
34. TOPSOIL FURNISH AND PLACE / SEEDING (SEE LANDSCAPING PLANS FOR DETAILS)
35. LONGITUDINAL SAWED OR CONSTRUCTION JOINT. FOR LONGITUDINAL SAWED JOINT, POUR IN PLACE NO. 6 DEFORMED EPOXY TIE BARS 30" LONG AT 30" C-C. FOR LONGITUDINAL CONSTRUCTION JOINT, DRILL AND GROUT NO. 8 DEFORMED EPOXY TIE BARS 24" LONG AT 24" C-C. (SHALL BE INCLUDED IN THE COST OF CONTINUOUSLY REINFORCED PCC PAVEMENT 14")
36. LONGITUDINAL CONSTRUCTION JOINT. DRILL AND GROUT NO. 6 DEFORMED EPOXY TIE BARS 24" LONG AT 24" C-C. (SHALL BE INCLUDED IN THE COST OF THE APPLICABLE COMB CONC CURB AND GUTTER TYPE)
38. LONGITUDINAL CONSTRUCTION JOINT. DRILL AND GROUT NO. 8 DEFORMED EPOXY TIE BARS 30" LONG AT 24" C-C. (SHALL BE INCLUDED IN THE COST OF THE APPLICABLE P.C.C. SHOULDERS TYPE)
39. SUB-BASE GRANULAR MATERIAL, TYPE B 12" (1)

(1)

BITUMINOUS MIXTURE REQUIREMENT

ITEM	AC TYPE	VOIDS	RAP %
BITUMINOUS STABILIZED SUB-BASE, 4½"	PG 58-22	3% @ 50 Gyr	40
TEMPORARY PAVEMENT (INTERSTATE)			
POLYMERIZED BIT. CONC. BINDER COURSE, SUPERPAVE, IL-19.0, N105, 14"	SBS PG 76-22	4% @ 105 Gyr	10

THE UNIT WEIGHT USED TO CALCULATE ALL BITUMINOUS SURFACE MIXTURES IS 112 LBS/SQYD/IN

STRUCTURAL PAVEMENT DESIGN FOR MAINLINE

STRUCTURAL DESIGN TRAFFIC: YEAR 2020
PV= 125,272 SU= 10,930 MU= 31,949
ROAD/STREET CLASSIFICATION: CLASS 1
PV= 8% SU= 37% MU= 37%
TRAFFIC FACTOR: ACTUAL TF= 264.46 AC TYPE= N/A
MINIMUM TF= 12.39
AC GRADE: BINDER= - SURFACE= -
SUBGRADE SUPPORT RATING:
SSR= 2.00 (STA. to STA.)
SSR= 2.00 (STA. to STA.)

NOTES:

1. SEE ROADWAY DETAILS FOR THE VARIABLE HEIGHT OF THE DOUBLE FACE BARRIER WALL AND FOR THE TYING OF THE BARRIER BASE TO THE PCC SHOULDER AND FOR THE LIMITS OF CONSTRUCTION OF THE SUB-BASE GRANULAR MATERIAL UNDER THE DOUBLE FACE BARRIER WALL.
2. THE SHOULDER RUMBLE STRIPS SHALL BE PLACED IN ALL PROPOSED AND EXISTING SHOULDERS ACCORDING TO IDOT STANDARD 642001. SEE ROADWAY PLANS FOR EXACT LOCATIONS.
3. TYPICAL SECTIONS NEED TO BE VERIFIED WITH THE ROADWAY PLANS AS THEY ARE A REPRESENTATION OF THE PLANS. THEY DO NOT SHOW ALL CONFIGURATIONS, JUST THE MOST PREDOMINANT.

(1) NOTES CONT:

4. THE SLOPE OF THE STABILIZED SUB-BASE 4 ½" UNDER THE SHOULDERS AND CURB & GUTTER SHALL MATCH THE SLOPE OF THE ADJACENT PAVEMENT IN THE NORMAL CROWNED AREAS.

CTE | AECOM

PRTYP-01

REVISIONS	
NAME	DATE
(1) ADDENDUM 1	7/27/06

ILLINOIS DEPARTMENT OF TRANSPORTATION
F.A.I. 90/94 (DAN RYAN EXPRESSWAY)
63RD STREET TO GARFIELD BLVD (NB LOCAL LANES)

PROPOSED TYPICAL SECTIONS
NORTHBOUND LOCAL LANES

SCALE: H:1"=10' V:1"=5' DRAWN BY: NJH
DATE: June 9, 2006 CHECKED BY: RMG

P:\V-40468\CM\NB-Cntrs 18 & 19\SHA\Cntr 18A\Typical Sections\T5EC18A0022A.dgn 7/28/2006 11:09:22 AM