F.A.I. RTE.	SECTION	COUNTY	TOTAL SHEETS	SHEET NO.
90/94	*	COOK	247	170
STA.		TO STA.		
FED. ROAD DIST. NO. 1	ILLINOIS	FED. AID PROJECT		

60A63 * (1919.15, 2021-922 PT1 & PT2) R-2

p:\p40465\civil\18-ctrs 18 & 19.stl\ctr 19\roadway details\rdt10.stl

EXISTING BARRIER WALL SIGN POST MOUNTING DETAILS

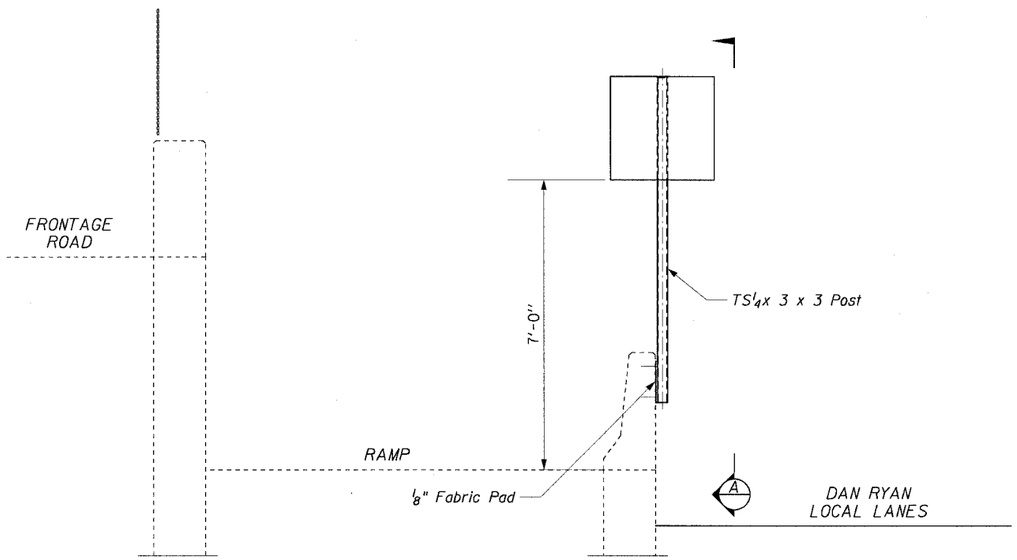

ELEVATION

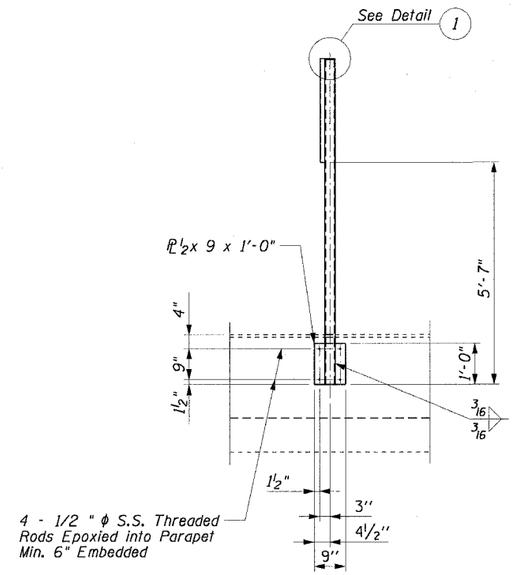

SECTION A

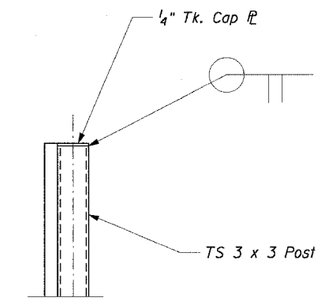

DETAIL 1

NOTE

When drilling and epoxy grouting the anchor rods, the Contractor shall use the capsule or the adhesive cartridge type anchor rods that have been previously tested and given a prior approval by IDOT. The Contractor shall install these anchor rods in pre-drilled holes according to the manufacturer's recommendations and procedures. The capsule or the adhesive cartridge shall be sealed with pre-measured amounts of the adhesive chemical. This associated materials and work performed shall be included in the cost of Base For Telescoping Steel Sign Support.

RDT-10

REVISIONS	
NAME	DATE

ILLINOIS DEPARTMENT OF TRANSPORTATION
F.A.I. 90/94 (DAN RYAN EXPRESSWAY)
63RD STREET TO GARFIELD BLVD (SB LOCAL LANES)

ROADWAY DETAILS
EXISTING BARRIER WALL
SIGN POST MOUNTING DETAILS

SCALE: NONE DRAWN BY: DS
DATE: June 9, 2006 CHECKED BY: SWANG

6/5/2006 10:17:36 PM

CTE | AECOM