F.A.I.	SECTION	COUNTY	TOTAL SHEETS	SHEET NO.
94/90 •		COOK	588	23
STA.		TO STA.		
FED. ROAD DIST. NO.	ILLINOIS	FED. AID PROJECT		

62303 • (2021-922 PT2 ETC 2324.6-1P) R-11

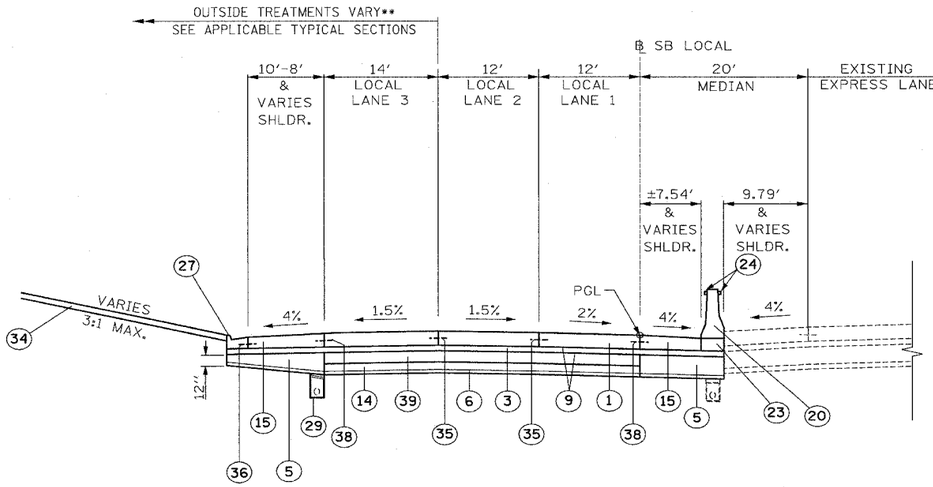

PROPOSED LOCAL LANES

STA. 3545+91.96 TO 3629+96

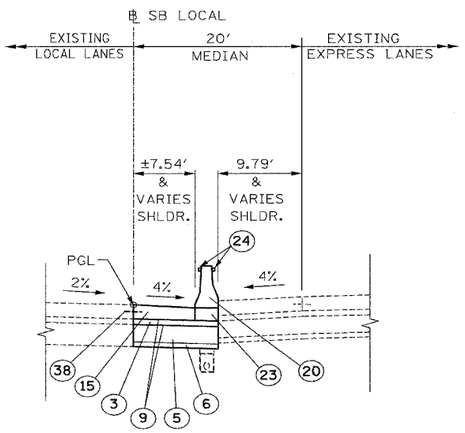

PROPOSED SHOULDER

STA. 3629+96 TO 3635+14

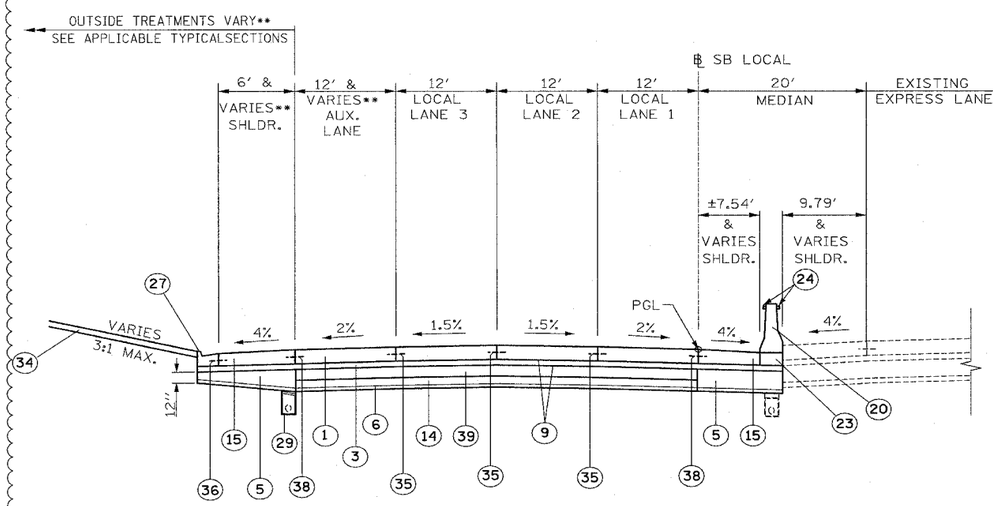

PROPOSED LOCAL LANES WITH AUXILIARY LANE

STA. 3530+93 TO 3543+83
STA. 3556+15 TO 3569+40
STA. 3597+50 TO 3622+50
(SUPER ELEVATED SECTIONS ARE SIMILAR)

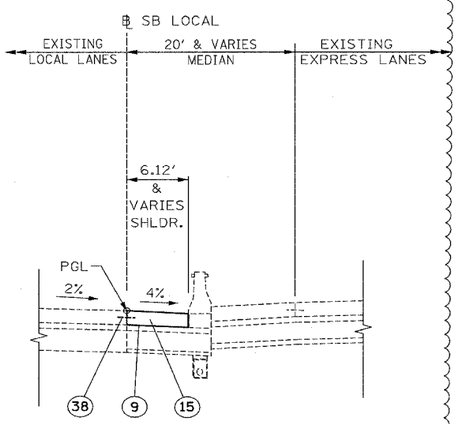

PROPOSED SHOULDER

STA. 3635+88 TO 3643+65

MAINLINE:

STRUCTURAL DESIGN TRAFFIC:		YEAR 2020
PV= 125,272	SU= 10,930	MU= 31,949
ROAD/STREET CLASSIFICATION:		CLASS 1
P= 8%	S= 37%	M= 37%
TRAFFIC FACTOR:	ACTUAL TF= 264.46	AC TYPE= N/A
	MINIMUM TF= 12.39	
AC GRADE:	BINDER:= -	SURFACE:= -
SUBGRADE SUPPORT RATING:		
SSR= 2.00		

BOWMAN, BARRETT & ASSOCIATES INC.
CONSULTING ENGINEERS
Chicago, Illinois
312.228.0100
www.bbandainc.com

PROPOSED LEGEND

1. CONTINUOUSLY REINFORCED PORTLAND CEMENT CONCRETE PAVEMENT 14" AND PAVEMENT REINFORCEMENT 14"
2. NOT USED
3. STABILIZED SUB-BASE 4½"
4. SUB-BASE GRANULAR MATERIAL, TYPE B 6"
5. SUB-BASE GRANULAR MATERIAL, TYPE B 24"
6. GEOTECHNICAL FABRIC FOR GROUND STABILIZATION
7. BITUMINOUS CONCRETE SURFACE COURSE, SUPERPAVE, MIX "D" N70, 1½"
8. POLYMERIZED LEVELING BINDER (MACHINE METHOD), SUPERPAVE, IL-4.75, N50, 1"
9. BITUMINOUS MATERIALS (PRIME COAT)
10. STRIP REFLECTIVE CRACK CONTROL TREATMENT
11. PORTLAND CEMENT CONCRETE BASE COURSE 9½"
12. PORTLAND CEMENT CONCRETE PAVEMENT 11" (JOINTED)
13. PORTLAND CEMENT CONCRETE SHOULDERS 11"
14. EXCAVATE AND PLACE EXISTING GRANULAR MATERIAL
15. PORTLAND CEMENT CONCRETE SHOULDERS 14" & VAR.
16. CONCRETE GUTTER, TYPE B
17. CONCRETE MEDIAN SURFACE, 5" (MODIFIED)
18. CONCRETE MEDIAN SURFACE, 6" (SPECIAL)
19. CONCRETE MEDIAN SURFACE, 6"
20. CONCRETE BARRIER, DOUBLE FACE, 32" HEIGHT
21. CONCRETE BARRIER, SINGLE FACE, 32" HEIGHT
22. CHAIN LINK FENCE, 4' (SPECIAL)
23. BARRIER BASE
24. BARRIER WALL MARKERS, TYPE C (80' C-C)
25. COMBINATION CONCRETE CURB AND GUTTER, TYPE B-6.12
26. COMBINATION CONCRETE CURB AND GUTTER, TYPE M-2.24
27. COMBINATION CONCRETE CURB AND GUTTER, TYPE M-4.24
28. COMBINATION CONCRETE CURB AND GUTTER, TYPE M-4.48 (MODIFIED)
29. PIPE UNDERDRAINS 6"
30. RETAINING WALL
31. MODIFIED EXISTING RETAINING WALL
32. SAND BACKFILL
33. GUARDRAIL
34. TOPSOIL FURNISH AND PLACE, SEEDING (SEE LANDSCAPING PLANS FOR DETAILS)
35. LONGITUDINAL SAWED OR CONSTRUCTION JOINT. FOR LONGITUDINAL SAWED JOINT, POUR IN PLACE NO. 6 DEFORMED EPOXY TIE BARS 30" LONG AT 30" C-C. FOR LONGITUDINAL CONSTRUCTION JOINT, DRILL AND GROUT NO. 8 DEFORMED EPOXY TIE BARS 24" LONG AT 24" C-C. (SHALL BE INCLUDED IN THE COST OF C.R.P.C.C. PAVEMENT 14")
36. LONGITUDINAL CONSTRUCTION JOINT. DRILL AND GROUT NO. 6 DEFORMED EPOXY TIE BARS 24" LONG AT 24" C-C. (SHALL BE INCLUDED IN THE COST OF THE APPLICABLE COMB. CONC. CURB AND GUTTER TYPE)
37. LONGITUDINAL CONSTRUCTION JOINT. DRILL AND GROUT NO. 8 DEFORMED EPOXY TIE BARS 24" LONG AT 24" C-C. (SHALL BE INCLUDED IN THE COST OF P.C.C. BASE COURSE 9")
38. LONGITUDINAL CONSTRUCTION JOINT. DRILL AND GROUT NO. 8 DEFORMED EPOXY TIE BARS 30" LONG AT 24" C-C. (SHALL BE INCLUDED IN THE COST OF THE APPLICABLE P.C.C. SHOULDER TYPE)
39. SUB-BASE GRANULAR MATERIAL, TYPE B 12"

NOTES:

1. SEE ROADWAY DETAILS FOR VARIABLE HEIGHT OF THE DOUBLE FACE BARRIER WALL AND FOR THE TYING OF THE BARRIER BASE TO THE PCC SHOULDER AND FOR THE LIMITS OF CONSTRUCTION OF THE SUB-BASE GRANULAR MATERIAL UNDER THE DOUBLE FACE BARRIER WALL.
2. SHOULDER RUMBLE STRIPS SHALL BE CONSTRUCTED IN THE PROPOSED AND EXISTING SHOULDERS OF THE LOCAL AND EXPRESS LANES ACCORDING TO IDOT STANDARD 642001.
3. TYPICAL SECTIONS NEED TO BE VERIFIED WITH THE ROADWAY PLANS AS THEY ARE A REPRESENTATION OF THE PLANS. THEY DO NOT SHOW ALL CONFIGURATIONS, JUST THE MOST PREDOMINANT.
4. THE SLOPE OF THE STABILIZED SUB-BASE 4½" UNDER THE SHOULDERS AND CURB AND GUTTER SHALL MATCH THE SLOPE OF THE ADJACENT PAVEMENT IN THE NORMAL CROWNED AREAS.

** SEE PLAN SHEETS FOR DETAILS

PRTYP-4

REVISIONS	
NAME	DATE
ADDENDUM 1	7/28/06

ILLINOIS DEPARTMENT OF TRANSPORTATION

F.A.I. 94/90 (DAN RYAN EXPRESSWAY)

GARFIELD BLVD TO 31ST STREET (SB LOCAL LANES)

PROPOSED TYPICAL SECTIONS

SCALE: NTS — DRAWN BY: JDC

DATE: 06/09/06 — CHECKED BY: RS

N:\660\cadd\civil\9\SHEET\5660_TSCT500.dgn 7/28/2006 1:35:49 PM