F.A.I. RTE.	SECTION	COUNTY	TOTAL SHEETS	SHEET NO.
94/90	*	COOK	588	262
STA.		TO STA.		
FED. ROAD DIST. NO.	ILLINOIS	FED. AID PROJECT		

* 62303 (2021-922 PT2 ETC 2324.6-1P) R-11

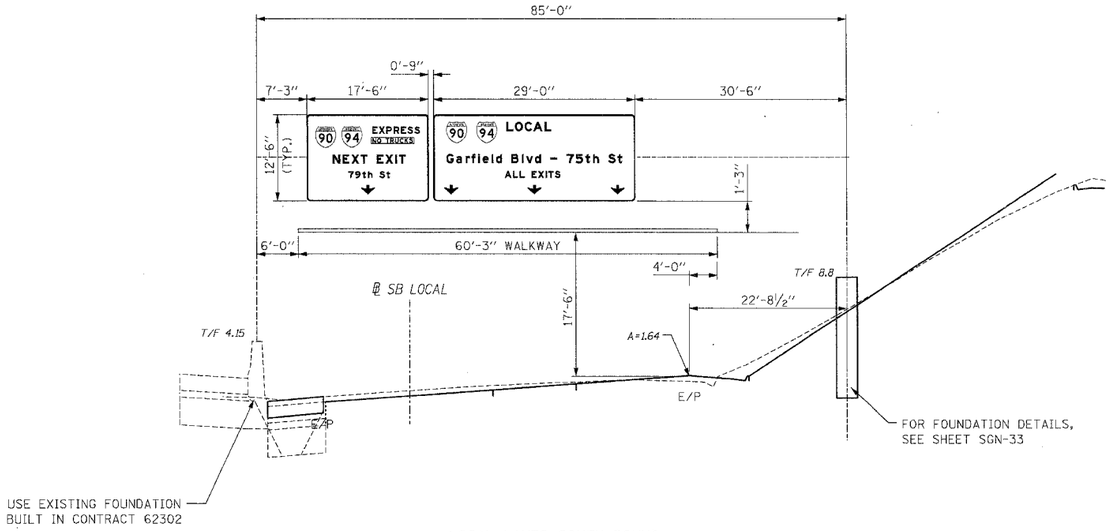

LOCAL LANES SOUTH BOUND
1S016I094R056.67
STA. 3532+00±

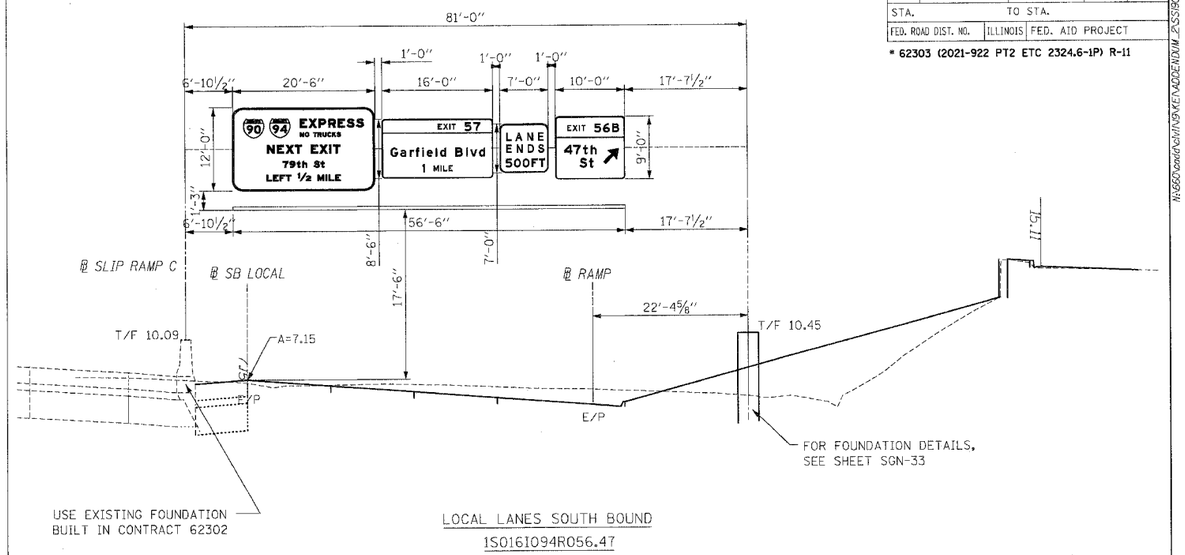

LOCAL LANES SOUTH BOUND
1S016I094R056.47
STA. 3543+00±

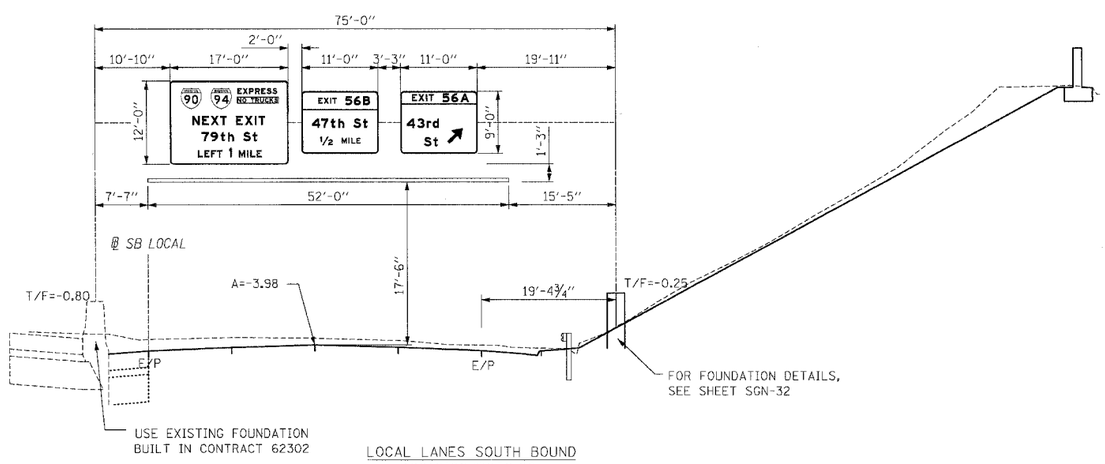

LOCAL LANES SOUTH BOUND
1S016I094R056.02
STA. 3566+30±

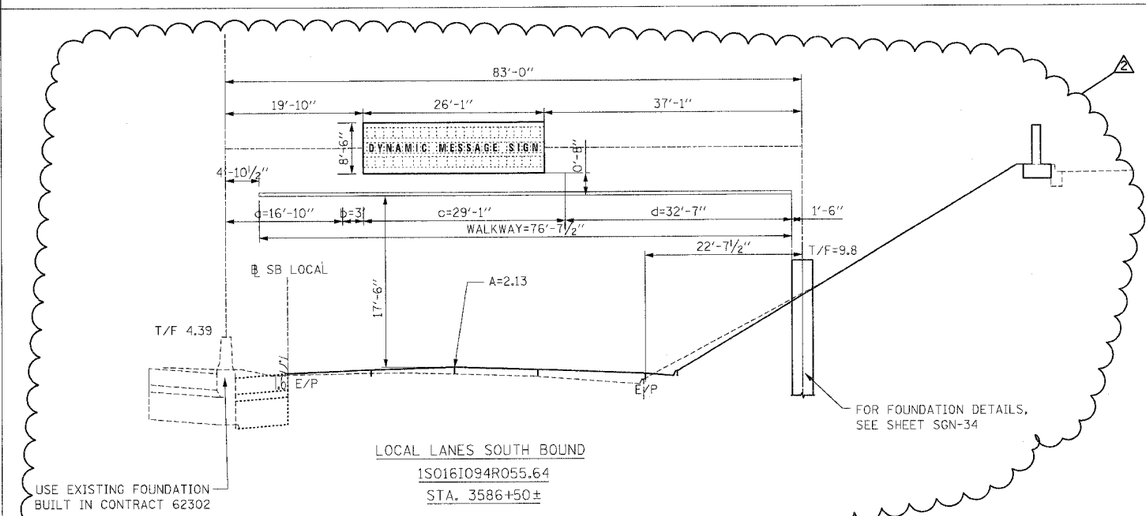

LOCAL LANES SOUTH BOUND
1S016I094R055.64
STA. 3586+50±

NOTES:

1. PROPOSED PAVEMENT FOR LOCAL LANES IS SHOWN FOR INFORMATION ONLY.
2. REFER TO ELECTRICAL INFRASTRUCTURE PLANS FOR ORIENTATION AND LOCATION OF THE CONDUIT EMBEDDED IN THE OVERHEAD SIGN FOUNDATIONS.
3. THE DYNAMIC MESSAGE SIGN SHALL BE FASTENED TO THE SIGN TRUSS BY THE CONTRACT 62303 CONTRACTOR. THE CONTRACTOR SHALL COORDINATE THE ERECTION OF THE SIGN TRUSS WITH CONTRACT 62583.
4. THE FABRICATOR SHALL COORDINATE WITH THE MANUFACTURER OF THE DYNAMIC MESSSAGE SIGN (DMS) TO DETERMINE THE ACTUAL SIZE, WEIGHT AND MOUNTING DETAILS OF THE DMS BEFORE ORDERING OR FABRICATING ANY MATERIALS FOR THE TRUSS OR WALKWAY/SIGN SUPPORTS.

SGN-12

REVISIONS	
NAME	DATE
ADDENDUM 2	8/04/06

ILLINOIS DEPARTMENT OF TRANSPORTATION
F.A.I. 90/94 (DAN RYAN EXPRESSWAY)
GARFIELD BLVD TO 31ST (SB LOCAL LANES)
SIGN PLACEMENT DETAILS

SCALE: NONE — DRAWN BY: RV
DATE: 06/09/06 — CHECKED BY: MSA

KAM ENGINEERING, INC.
CONSULTING ENGINEERS
707A Davis Road, Suite 205
Elgin, Illinois 60123-1369

N:\660Condo\Civil\NOVKE\ADDENDUM_2\SSD01D.dgn
8/4/2006 4:57:52 PM